Micro-Tech™ 3000
Model 3104 Loss-in-Weight Controller

REC 4185 Rev B, Part No. 074801

Revision History

Revision Number	Date Released	ECO Number	Release Specifics
Revision 4	July 2003	3484	Manual first released
Revision B	October 2006		Technical Specification Correction (fusint)

l

Software Program Licence Terms

The Software Program is licensed, not sold. Thermo Fisher Scientific, grants you a license for the Software Program only in the country where you acquired the Equipment, as defined below. You obtain no rights other than those granted you under this license.

The term "Equipment" means the equipment with which the Software Program is used. The term "Software Program" means the original and all whole or partial copies of the Software Program used in connection with Equipment sold by Thermo Fisher Scientific to the user, including modified copies or portions of the Software Program. Thermo Scientific retains title to the Software Program, as well as all improvements, modifications and enhancements to the Software Program, whether made by Thermo Scientific or any other party. Thermo Scientific owns, or has licensed from the owner, copyrights in the Software Program.

You are responsible for the selection of the Equipment.

Following the commissioning of the Equipment, any change made by the user to the Software Program will terminate all warranties with respect to the Equipment and Software Program.

All other trademarks are the property of Thermo Fisher Scientific and its subsidiaries.

License

Under this license, you may:

1. Use the Software Program on only one piece of equipment at any one time, unless the license information specifies otherwise;
2. Copy the Software Program for backup or in order to modify it;
3. Modify the Software Program and/or merge it into another Software Program; and
4. Subject to the following limitations, transfer the possession of the Software Program to another party, but only in connection with a transfer of the Equipment. If you transfer the Software Program, you must transfer a copy of these License Terms, all other documentation and at least one complete, unaltered copy of the Software Program to the other party. Unless you have other copies of the Software Program to be used in connection with other Equipment purchased from Thermo Scientific, or one of its divisions, you must, at the same time, either transfer all your other copies of the Software Program to the transferee of the Equipment or destroy them. Your license is then terminated. The other party agrees to these terms and conditions by its first use of the Software Program.

5. You must reproduce the copyright notices(s) on each copy of the Software Program.

You may not:

1. Use, copy, modify, merge, or transfer copies of the Software Program except as provided in this license;
2. Reverse engineer, decompile, or disassemble the Software Program; or
3. Sub-license, rent, lease, or assign the Software Program.

Limitation of Remedies

Thermo Scientifics' entire liability under this license is the following:

Thermo Scientific will: (a) replace defective media, or (b) make a warranted Software Program operate or (c) replace the Software Program with a functionally equivalent Software Program, as warranted.

For any claim (including breach), in any form, related in any way to this license, Thermo Scientifics liability will be for the actual value of the Software Program.

Thermo Scientific will not be liable for any lost profits, lost savings, any incidental damages, or other economic consequential damages, even if Thermo Scientific, or its authorized supplier, has been advised of the possibility of such damages. Thermo Scientific will not be liable for any damages claimed by you based on any third party claim.

General

Thermo Scientific may terminate your license if you fail to comply with the terms and conditions of this license. In such event, you must destroy all your copies of the Software Program. You are responsible for payment of any taxes, including personal property taxes, resulting from this license.

Occupational Safety and Health Act (OSHA)

The Occupational Safety and Health Act clearly places the burden of compliance on the user of the equipment and the act is generalized to the extent that determination of compliance is a judgment decision on the part of the local inspection. Hence, Thermo Scientific will not be responsible for meeting the full requirements of OSHA in respect to the equipment supplied or for any penalty assessed for failure to meet the requirements, in respect to the equipment supplied, of the Occupational Safety and Health Act, as interpreted by an authorized inspector. Thermo Scientific will use their best efforts to remedy such violation at a reasonable cost to the buyer.

Thermo Scientific Warranty

The seller agrees, represents, and warrants that the equipment delivered hereunder shall be free from defects in material and workmanship. Such warranty shall not apply to accessories, parts, or material purchased by the seller unless they are manufactured pursuant to seller's design, but shall apply to the workmanship incorporated in the installation of such items in the complete equipment. To the extent purchased parts or accessories are covered by the manufacturer's warranty, seller shall extend such warranty to buyer.

Seller's obligation under said warranty is conditioned upon the return of the defective equipment, transportation charges prepaid, to the seller's factory in Minneapolis, Minnesota, and the submission of reasonable proof to seller prior to return of the equipment that the defect is due to a matter embraced within seller's warranty hereunder. Any such defect in material and workmanship shall be presented to seller as soon as such alleged errors or defects are discovered by purchaser and seller is given opportunity to investigate and correct alleged errors or defects and in all cases, buyer must have notified seller thereof within one (1) year after delivery, or one (1) year after installation if the installation was accomplished by the seller.

Said warranty shall not apply if the equipment shall not have been operated and maintained in accordance with seller's written instructions applicable to such equipment, or if such equipment shall have been repaired or altered or modified without seller's approval; provided, however, that the foregoing limitation of warranty insofar as it relates to repairs, alterations, or modifications, shall not be applicable to routine preventive and corrective maintenance which normally occur in the operation of the equipment.

"EXCEPT FOR THOSE WARRANTIES SPECIFICALLY CONTAINED HEREIN, SELLER DISCLAIMS ANY AND ALL WARRANTIES WITH RESPECT TO THE EQUIPMENT DELIVERED HEREUNDER, INCLUDING THE IMPLIED WARRANTIES OF MERCHANTABILITY AND FITNESS FOR USE. THE SOLE LIABILITY OF SELLER ARISING OUT OF THE WARRANTY CONTAINED HEREIN SHALL BE EXCLUSIVELY LIMITED TO BREACH OF THOSE WARRANTIES. THE SOLE AND EXCLUSIVE REMEDY FOR BREACH OF THE WARRANTIES SET OUT ABOVE SHALL BE LIMITED TO THE REPAIR OR REPLACEMENT OF ANY DEFECTIVE ACCESSORY, PART OR MATERIAL WITH A SIMILAR ITEM FREE FROM DEFECT, AND THE CORRECTION OF ANY DEFECT IN WORKMANSHIP. IN NO EVENT SHALL SELLER BE LIABLE FOR ANY INCIDENTAL OR CONSEQUENTIAL DAMAGES."

Purchaser agrees to underwrite the cost of any labor required for replacement; including time, travel, and living expenses of a Thermo Scientific Field Service Engineer at the closest factory base.

Thermo Fisher Scientific
501 90th Ave. NW
Minneapolis, MN 55433
Phone: (800) 227-8891
Fax: (763) 783-2525

Disclaimer

Table of Contents

****

THIS PAGE LEFT BLANK INTENTIONALLY

****

List of Figures

****

THIS PAGE LEFT BLANK INTENTIONALLY

****

List of Tables

****

THIS PAGE LEFT BLANK INTENTIONALLY

****

About this Manual

This manual provides the information you need to install, operate, and maintain the *Micro-Tech 3104.*

Read this manual before working with the product. For personal and system safety, and for the best product performance, make sure you thoroughly understand the manual before installing or using this product.

Who Should Use this Manual

The Micro-Tech 3104 manual is a learning resource and reference for anyone concerned with installing, operating, or maintaining Thermo Scientific Micro-Tech 3104.

Read this manual before working with the system. For personal and system safety, and for the best product performance, make sure you thoroughly understand the manual before installing, operating, or maintaining this machine.

Organization of the Manual

This manual is organized into five chapters and 7 Appendixes.

Chapter 1: Introduction gives an overview of the device's capabilities, describes its functions, and lists its technical specifications.

Chapter 2: Installation provides information about installing the *Loss-in-weight controller* including procedures for mounting, wiring, and configuring the *Micro-Tech 3104* system.

Chapter 3: Operations provides an overview of the *Micro-Tech 3104* front panel, a description of how the menus operate, and information about setting up, calibrating, and operating the *Loss-in-Weight Controller*.

Chapter 4: Maintenance provides an overview of standard maintenance associated with the 3104.

Chapter 5: Replacement Parts- provides a list of replacement parts for the 3104 and part ordering information.

Appendix A: Micro-Tech 3104 Menu gives an overview of the menu*s*.

Appendix B: System Design Information

Appendix C: Linearization

Appendix D: Digital and Analog Input/Output

Appendix E: Additional Documentation

Appendix F: Engineering Drawings

Appendix G: Available Analog I/O and A/D Configuration Micro-Tech 3000 Series

Documentation Conventions

The following conventions are used in this manual to help easily identify certain types of information:

- *Italic* is used to introduce new terms and for emphasis.
- *Italic/blue* type is used for references to other sections of the manual and work as links on line and in pdf format.
- The names of setup, calibration displays, menu displays, and variables are shown in **FULL CAPITALS**.
- The names of keys on the front panel are shown in **BOLD CAPITALS**.

Safety Messages

Instructions in this manual may require special precautions to ensure the safety of the personnel performing the operations.

Please read the safety information before performing any operation preceded by this symbol.

There are two levels of safety messages: warnings and cautions. The distinction between the two is as follows:

⚠ **WARNING**
FAILURE TO OBSERVE COULD RESULT IN DEATH OR SERIOUS INJURY.

⚠ **CAUTION**
FAILURE TO OBSERVE MAY CAUSE MINOR INJURY OR DAMAGE THE EQUIPMENT

General Precaution

Do not install, operate, or perform any maintenance procedures until you have read the safety precautions presented.

WARNING

FAILURE TO FOLLOW SAFE INSTALLATION AND SERVICING PROCEDURES COULD RESULT IN DEATH OR SERIOUS INJURY.

- MAKE SURE ONLY QUALIFIED PERSONNEL PERFORM INSTALLATION AND MAINTENANCE PROCEDURES IN ACCORDANCE WITH THE INSTRUCTIONS IN THIS MANUAL.
- ALLOW ONLY QUALIFIED ELECTRICIANS TO OPEN AND WORK IN THE ELECTRONICS CABINET, POWER SUPPLY CABINET, CONTROL CABINET, OR SWITCH BOX.
- COVERS OVER THE ELECTRONICS AND ROTATING PARTS MUST ALWAYS REMAIN IN PLACE DURING NORMAL OPERATION REMOVE ONLY FOR MAINTENANCE, WITH THE MACHINE'S POWER OFF. REPLACE ALL COVERS BEFORE RESUMING OPERATION.
- DURING MAINTENANCE, A SAFETY TAG (NOT SUPPLIED BY THE FACTORY) IS TO BE DISPLAYED IN THE ON/OFF SWITCH AREAS INSTRUCTING OTHERS NOT TO OPERATE THE UNIT (ANSI: B157.1).

WARNING

HIGH VOLTAGE THAT MAY BE PRESENT ON LEADS COULD CAUSE ELECTRICAL SHOCK.

- ALL SWITCHES MUST BE OFF WHEN CHECKING INPUT AC ELECTRICAL CONNECTIONS, REMOVING OR INSERTING PRINTED CIRCUIT BOARDS, OR ATTACHING VOLTMETERS TO THE SYSTEM.
- USE EXTREME CAUTION WHEN TESTING IN, ON, OR AROUND THE ELECTRONICS CABINET, PC BOARDS, OR MODULES. THERE ARE VOLTAGES IN EXCESS OF 115 V OR 230 V IN THESE AREAS.

WARNING

USE ONLY THE PROCEDURES AND NEW PARTS SPECIFICALLY REFERENCED IN THIS MANUAL TO ENSURE SPECIFICATION PERFORMANCE AND CERTIFICATION COMPLIANCE. UNAUTHORIZED PROCEDURES OR PARTS CAN RENDER THE INSTRUMENT DANGEROUS TO LIFE, LIMB, OR PROPERTY.

WARNING

KEEP HANDS AND CLOTHING AWAY FROM ALL MOVING OR ROTATING PARTS.

WARNING

DO NOT PLACE OR STORE OBJECTS OF ANY KIND ON THE MACHINE.

WARNING

THIS MACHINE SHOULD NOT BE OPERATED AT MORE THAN THE PRODUCTION RATE STATED ON YOUR EQUIPMENT SPECIFICATION SHEET OR USED IN APPLICATIONS OTHER THAN THOSE STATED IN THE ORIGINAL ORDER.

Chapter 1
Introduction

This instruction manual contains information on the installation, operation, calibration, and maintenance of the *Micro-Tech™ 3000 Model 3104 Field Mount* and *Panel Mount Microprocessor* based, digital loss-in-weight controller. This instrument is designed for application on loss-in-weight scales with loadcell measurement.

1.1 Unpacking and Inspection

The *Micro-Tech 3104* has been properly packaged for shipment and storage, when necessary. Refer to the appropriate manual in the appendix section for unpacking procedures for optional equipment.

Inspect all packages for damage before opening; sometimes the carrier may be responsible for shipping damage. Refer to the appropriate manual in the appendix for inspection procedures for optional equipment.

1.2 Storage

The *Micro-Tech 3104* can be safely stored, with cover, latches secured and hole plugs installed, between -40° to +158° F (-40° to +70° C). The units should be protected against moisture.

1.3 Application

*The Micro-Tech 3104 Field Mount (*Figure 1-1) or *Panel Mount (*Figure 1-2) is a microprocessor based menu driven controller designed to control the feed rate of the following machines:

- Loss-in-weight feeders
- Increase weight feeders

The *Micro-Tech 3104* can also be configured to control the following systems:

- Feed rate control with extraction from a silo
- Ratio control of different loss-in-weight feeders
- Blending system

1.4 Micro-Tech 3104 Standard Features

The *Model 3104 Loss-in-Weight Controller* has many hardware and software features necessary for controlling the processes listed above. The following main features are listed below. Other features are listed in specific sections of this manual.

- Menu driven scroll entries on a four line display
- Five LED status indicators
- Visible and electrical outputs representing load measurement, calculation of rate as load change per unit of time and integration of load differences to obtain totalized quantities
- Automatic zero and span calibration
- Several software options that can be turned on by keypad entry or by installing optional plug-in PC boards
- Three process control modes: Conventional PID (Proportional, Integral, Derivative), PID+S (same as PID except it quickly reacts to a set point change), and PEIC (Periodical Error Integral Control)
- Two independent scale weighing systems and control loops
- Dual channel analog output for control loop and rate. Dual channel voltage inputs for remote set point moisture compensation can be programmed for other uses.
- Optically coupled digital inputs and outputs
- Alarms and failure detection
- Communication standards: RS232C, RS485 networking multidrop, 20 mA current loop passive, Allen-Bradley DF1, Modbus RTU

Figure 1-1: ***Micro-Tech 3104*** **Field Mount** ***Loss-in-Weight Controller***

Figure 1-2: ***Micro-Tech 3104*** **Panel Mount** ***Loss-in-Weight Controller***

1.5 Configuration

The standard configuration of the *Loss-in-Weight Controller* includes the following:

- Single channel loadcell input to a max of 6 loadcells
- Single current output on Mother Board
- Dual channel current output, analog input board (2 analog in 2 analog out).
- 5 programmable digital inputs
- 4 programmable outputs

- 1 fault output
- Serial communications
- Solid state output
- 2 circuit board expansion slots that can accommodate the following boards if needed.
  1. Single channel current output board
  2. 16 digital inputs/4 digital outputs
  3. 4 digital inputs/16 digital outputs
  4. Serial communication board
  5. *Allen-Bradley remote I/O*
  6. *Profibus-DP* board
  7. *DeviceNet*

1.6 *Loss-in-Weight Controller* General Description

The *Micro-Tech 3104 Loss-in-Weight Controller* has been designed for loss-in-weight feeder, and is capable of performing all of the necessary measuring and control functions. All of the required functions are resident in the software of the microprocessor. Optional functions are automatically turned on when the relevant hardware is installed, or after the operator has selected them through the keypad.

Setup of the *Micro-Tech 3104* is easy and is performed from the keypad on the front of the device. The setup parameters may be divided into the following main groups.

- Measuring
- Automatic Control
- Monitoring
- Printing
- Communication

1.6.1 Measuring Functions

The *Loss-in-Weight Controller* can be directly connected up to six 350 ohm loadcells and convert the weight signal into a numeric value with very high accuracy and resolution.

Rate is calculated as decrease or increase of weight in time. Total is computed on three individual registers: total, reset total, and operator total. It is calculated as the difference of weight at given time intervals.

The *Loss-in-Weight Controller* can perform automatic zero and span calibrations. Analog (current) output signals can be generated to transmit rate, net and gross weight to other control devices. Displayed variables and analog outputs can be smoothed via damping filters, individually programmable.

The system fully handles the refill of the bin, by acting in volumetric mode during the refilling time and adjusting the volumetric constants according to the current net weight.

One single instrument can control one or two completely independent loss in weight feeders.

1.6.2 Automatic Control Functions

The *Loss-in-Weight Controller* provides two independent control loops, one for each loss in weight feeder. In both cases, the control loop can be either:

- PID = Proportional + Integral + Derivative
- PID + S = PID with cascade on set-point
- P.E.I.C. = Periodical Error Integral Control

The process variable under control can be feed rate. The set point can be entered via keyboard, or received through a serial communication channel or an analog input. Control output can be either current or pulses.

When the *Loss-in-Weight Controller* is not running, the control output is locked in position or forced to a preset value defined by the operator.

When the controller is switched from Manual or Automatic and vice versa, the integral term is adjusted so the change does not generate jumps of the control outputs (bump-less).

The *Loss-in-Weight Controller* can optionally operate the Load Out (Batch) software with full control or preset (high/low feed rate), pre-act and start delay to compensate for distance of feeding points when operating several feeders in ratio. For application in blending systems, where more feeders need to operate with one set point source, but different ratios, the ratio between the main set point and each feeder can be entered through the keyboard, analog input or serial link.

Two weight thresholds (High and Low weight) are entered to define when the refilling has to start and to stop. The system will turn on the “Refill Output” when the Low Level is reached, but will continue to operate in normal mode until the “Refill Input” is turned on. When this happens, the system will switch to volumetric mode, and continue to work while the bin is refilled. When the weight is over the High threshold, the “Refill Output” is turned off. The system will remain in volumetric mode until the “Refill Input” turns off and a delay time has elapsed.

1.6.3 Monitoring Functions

The *Loss-in-Weight Controller* includes internal diagnostics that generate alarms in case of hardware failures or programming errors. The following process alarms are also provided:

- High control deviation
- Alarms for high and low flow rate and weight

Alarms are visible on the display and can be acknowledged and

reset through keyboard, digital input, or serial line. Alarms can be delayed to avoid intervention in case of short time peaks. Each individual alarm can be programmed to operate as alarm, shut down, or ignored.
Two LED's indicate the cumulative status of alarms and shut down. Digital outputs are also provided for the following:

- Hardware failure
- High control deviation
- Alarm cumulative
- Shut down cumulative

1.6.4 Print Functions

Periodical and command prints can be obtained by connecting a serial printer to the Comm output on the motherboard or an optional communication board. Time and date are permanently stored in the battery-backed memory. The entire set up of the instrument can also be printed out.

1.6.5 Communication Functions

There are two types of standard communication functions. Each is discussed below:

- *Serial Communications* – The communication protocol allows a remote intelligent device to read the contents of the registers and write to some registers.

  During the communication activity, the *Micro-Tech 3104* always acts as a Slave, meaning it responds to a request from a Master device on the line, but never attempts to send messages out.
  One electrical interface may be selected and accessed through one communication port. Up to three communication boards may be installed.
- *Field Bus I/O – Allen-Bradley RIO* or *Profibus-DP I/O, or DeviceNet* communication protocol board is typically used to transfer I/O images between a main PLC and the remote devices (normally remote I/O racks – rack adapters) or to transfer (read and write blocks of data with intelligent remote devices (node adapters), the *Micro-Tech 3104* in this case.

  The Remote I/O is a typical master/slave communication where the main PLC is the master or scanner and the remote devices are slaves or adapters.

1.7 Functional Description

This section describes technically, how the *Micro-Tech 3104* performs each particular duty.

1.7.1 Measuring Functions

1.7.1.1 Flow Rate

In a loss-in-weight system, the flow rate measurement is done by taking the difference between two subsequent weight measurements. The time between the two measurements has to be

short enough to keep the response time of the system within an acceptable value.

Therefore, the difference between the two weights is a very low value and it is strongly affected by any noise on the weight signal, which may be produced by vibrations of the mechanical parts.

The accuracy and stability of the flow rate measurements improves under the following conditions:

- Increase of the speed variation of the weight signal by reducing the hopper discharge time and increasing the ratio between net weight and loadcell capacity.
- Reduction of the weight signal noise caused by mechanical vibrations by increasing the ruggedness of the mechanical structure supporting the weight hopper

To handle the above problems, the *Loss-in Weight Controller* provides various averaging and damping of the signals.

Each of the two weight values used to calculate the weight difference is the average of a number of weight measurements; this number is called “WEIGHT CONSTANT” (W) and is adjustable from 2 to 16.

The time within two subsequent weight measurements is also adjustable and is called “RATE INTERVAL” (T) (values adjustable from 0.1 to 6.0 seconds).

The product of W times T is called “RATE FACTOR” (F) and defines the difference in time, within the two weight values, used to calculate the weight difference.

However, the program calculates and updates the flow rate value at each T time by using the values memorized on a number of memories equal to “W” shifted each one from the other of “T” time.

This means that after a step variation of actual flow rate the time required for the calculated flow rate to represent 100% of the variation is equal to F with linear change from old to new value. See Figure 1-3.

Figure 1-3: *Micro-Tech 3104* Loss of Weight Step Response

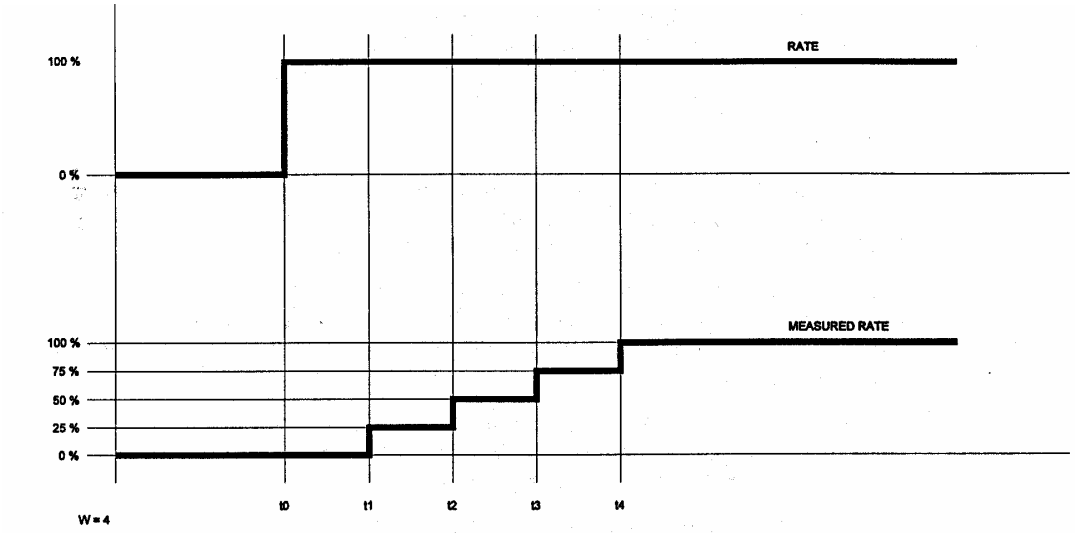

A damping action (asymptotic curve) can also be applied to the calculated flow rate value for additional filtering to compensate plant vibrations. On sizing a loss-in-weight system, extreme care should be taken to maintain the full-scale flow within the acceptable limits to avoid running into unstable operating conditions.

The minimum acceptable flow rate is determined by the resolution of the A/D converter and by the sizing of the loadcell with respect to the net weight. The A/D converter provides 262000 counts when the load is 100% on a 3.5 mV/V loadcell. Using loadcells with high output (3mV/V) and maintaining the ratio between the net weight and the size of the loadcells high, allows a better resolution in the rate reading. If, for example, a 2 mV/V loadcell is used, and ratio between net and loadcell capacity is 50%, the available number of A/D count reduced to 74857=(262000 x 2/3.5 x 50/100). If the system has two work at rate so low that it takes 3 hours to discharge the entire bin, the internal number representing the load will decrease at a rate of only 10 counts per seconds [= 74857/(2 x 3600)]. This means that the rate indication will be updated each 10 seconds if we want a resolution of 1%. To achieve this, we will enter values of W and T so that F= (T x W) is at least equal to 10. The system will still work, but the indication of rate will react slowly.

The maximum rate is limited by the ratio between the discharge time and the refill time. Since the system works in volumetric mode during the refilling period, the system should be designed so that the ratio between the refilling time and the working time does not exceed 1%.

In addition, discharge times larger than 3 hours have to be considered critical, because the effect of little vibrations would become appreciable to an extent that may compromise the functionality of the system. In addition, the quality of the feeding machine must be taken in consideration. Low rates mean very small amounts of material to be moved, so the feeding machine must be able to modulate the flow of material in the smoothest way, avoiding to form blocks of material or temporary absence of it.

1.7.1.2 Totalization

During normal operation the totalization performed by taking the difference between the initial weight of the material in the bin and the actual weight; thus the totalization has the same accuracy of a static weighing.

During the silo refilling, the totalization is performed by integrating the set point (which is supposed to be equal to the flow rate as this one cannot be calculated); thus during the hopper refilling the totalization may be affected by additional errors.

The additional errors introduced into the totalization by the refilling period depend on the ratio between the refilling time and the discharge (or charge) time. The higher this ratio is, the higher the error is.

The totalization takes place each second by memorizing the difference between the actual and reference weight. Then, the actual weight is memorized and used as reference weight for subsequent totalization operation. In case of very low flow rates and plant vibrations, the result of a single totalization operation may be negative (due to the vibrations); in this case, the data is not considered and the reference weight is kept unchanged. At the end of the refilling of the silo, the program memorizes the new weight value as reference for the totalization.

1.7.1.3 Zero and Span Automatic Calibrations

The zero and span calibrations are normally performed by the instrument based on the data entered through the keypad.

The instrument compares the value measured during the calibration test with the theoretical one (zero for zero calibration; calibration constant for span calibration) and recalculates the instrument parameters necessary to obtain a measurement equal to the theoretical value.

1.7.1.4 Silo Refilling

Minimum and maximum levels, which are used to start and stop the refilling of the silo, can be entered through keypad. When the silo weight drops below a minimum level, the instrument closes the output signal REFILL HOPPER suitable to start the refilling machine (dumper, conveyor, etc.). However, the actual volumetric action is only started when the “FEEDBACK REFERENCE” input is set. The user can wire back the REFILL HOPPER output to the FEEDBACK REFERENCE input, or just ignore the REFILL

HOPPER output and activate the input when needed. In all cases, when the refilling is started, the *Loss-in-Weight Controller* automatically enters in a stand-by mode and locks the output signal to its last value (this value can be modulated by start-point changes if the PID + S control action has been chosen). When the high level value is reached, the REFILL HOPPER output will be set off, to stop the refilling device.

The volumetric phase, however, will only end when the FEEDBACK REFERENCE signal returns to normal. Then, a stabilization time will start, and a t the end of the time the normal gravimetric phase will start again.

If the refilling does not end within a max adjustable time, an alarm occurs.

1.7.1.5 Density Compensation

In some applications, it may happen that an appreciable difference in density exists between empty and full bin. In normal conditions, the control output is locked to its value at start of refilling and rate is supposed to remain unchanged until the end. However, if density will increase during refilling, real rate will be appreciably higher at end of refilling, and the system will take some time to acquire the new rate, and some additional time to properly set the control output. The system reduces this effect by acting in one of the following ways:

SET CONTROL OUTPUT

The control output, at end of refilling, is set to a pre-defined value:

Control Out = Set Control Out

CORRECT CONTROL OUT

The control out, at the end of refilling, is corrected by a predefined value:

Control Out = Control Out + Control Out x Correction/100

RECORDING DENSITY VARIATION

In this case, the system will record, during the gravimetric phase, the relationship between the weight and the control output. During the following phase of refill, the control out will be set according to the recorder values, with reference to the increasing weight. This method also increases the accuracy of totalization during the refill phase. The number of recorder coefficients is 20.

Control Out = Control Out x Coeff (i)

Where “i” is selected between 1 and 20 according to the current load status

1.7.1.6 Current Output Signals

The *Loss-in-Weight Controller* has two current output signals (0-20/4-20mA), upgradeable to three or four by adding one board. The choice of the signal type is made through the keypad. Each current output may be programmed by keypad to deliver one of the following signals:

- Flow rate
- Control signal
- Net and gross weight

Each output has its own adjustable damping and programmable delay.

1.7.2 Automatic Control Functions

1.7.2.1 Automatic Control of Instantaneous Value

The *Loss-in-Weight Controller* maintains the process variable equal to the set point by varying the control output signal.

The process variable is rate. The set point may be entered through the keypad (local set) or, as an external signal (remote set), which may be an analog or serial signal.

When the feeder is not running and the controller is on automatic, the control output may correspond to one of the following conditions selected through the keypad:

- Locked on the last value before the stop
- Locked on a value from 0-100% as entered through the keypad

When the feeder starts, the controller begins the control action from the value at which the output was locked when the feeder stopped.

Auto/manual switching is of bump-less type.

1.7.2.2 PID Control Action

There are three main control actions (Proportional + Integral + Derivative). The control action is given by the following formula:

$$OUT = Kp \times E + Ki \times \int E\,dt + d/dt\,E$$

Where:
OUT = output control signal
Kp = proportional band
Ki = integration constant
Kd = derivative constant
E = control deviation (set-point minus process variable)

The three constants Kp, Ki, and Kd are entered through the keypad, by entering zero the corresponding control action is not performed.

1.7.2.3 PID + S Control Action

If this control action is selected, the control output will be changed proportionally to the set point variations.

This control action gives a greater response time to set point variations. It may only be used for those applications where the volumetric flow is linear with the control output (start feeder, screw feeders, variable speed conveyor, etc.). In addition, the flow rate is volumetrically updated as a function of set point during the refilling period.

OUT = 0.5 x *SET POINT / MAX SET POINT*

1.7.2.4 P.E.I.C. Control

In processes where a time exists between the regulation point and the measuring point, this control action is particularly useful. The control action is made by periodical adjustments of the control signal followed by a waiting time correspondent to the process dead time. During the waiting time, the output signal remains constant. At the end of the waiting time, the output signal changes for a time equal to the " Integral Time". The total variation of the output signal within the two seconds is proportional to the deviation between set point and controlled variable. By reducing the proportional band and/or increasing the integral time, the control signal variation increases for the same deviation.

Figure 1-4: P.E.I.C Control

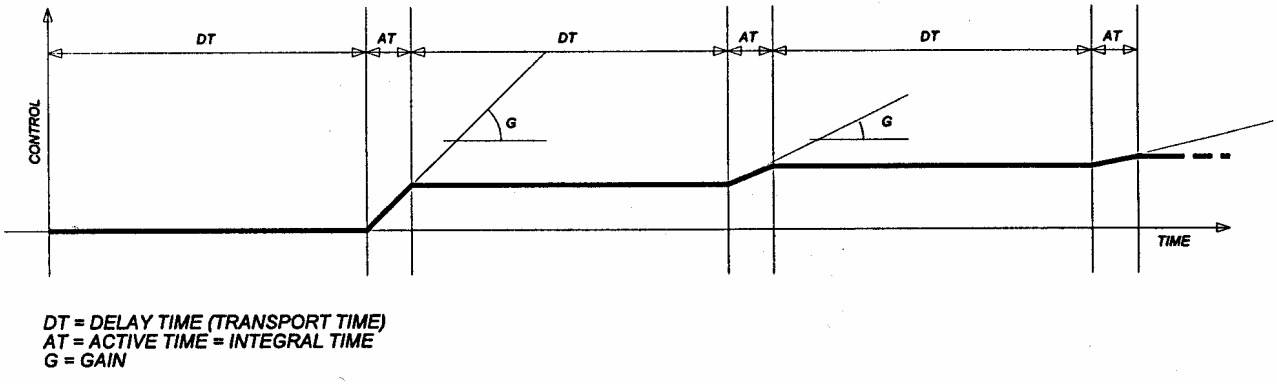

1.7.2.5 Analog Delay

In control system where several feeders operate in ratio, the transport time from each feeder to the mixing point can be different. To insure the correct ratio at the mixing point, an analog delay can be programmed on the remote set-point signal and or on the analog output. This delay provides a time shift for the variations of the variable.

The delay is performed using a table with 50 positions. The resolution (in seconds) is related to the present time, i.e.:

Delay time(s)	resolution (s)
Up to 25	0.5
From 26 to 50	1
From 51 to 100	2
From 101 to 250	5
From 251 to 500	10

1.7.2.6 P.E.I.C. Increase Decrease Controls

The control can either be an analog output or increase/decrease digital outputs (in this case the control is proportional).

The activation time of the output is given by the following formula:

$$act\ time = PEIC\ time \times e\ [\%] / Prop\ band\ [\%]$$

If the error is positive (process variable > set point), the "decrease" output is activated. If negative, the "increase" output is being activated. If the P.E.I.C. time is defined, P.E.I.C. increase/decrease digital outputs become active.

1.7.2.7 Automatic Manual

The *Loss-in-Weight Controller* can have two possible states:

AUTOMATIC The Loss-in-weight controller's automatic control performs as described in Step 1.7.2.1

MANUAL The value of the control output is set manually by the operator by using the keypad.

Automatic or Manual mode is selected using the AUTO/MAN key. Changing between the two states is seamless.

1.7.2.8 Batch Control

The *Loss-in-Weight Controller*, while performing the automatic control of the flow rate, may also perform a batch control.

In this case, the feeder operates under flow rate control and stops when the required quantity (quantity set) is reached. A preset value may be entered to switch to a lower feed rate. When the totalized value equals the value of the quantity set minus preset, the controller will switch to a lower rate set-point (low rate set) thus reducing the flow rate for a fine batching end. The unit also allows the pre-act correction (or compensation of material before the scale) whose value is entered manually. The feeder is stopped when the totalized value equals the batch set value minus the overflow correction value.

The batch STAR/STOP commands are provided by the external signals (manual pushbutton or relay contact from automatic system). The batch stop signal is used only as emergency to abort the batch cycle before its end. A delay time is provided between start command and actual start to compensate the difference in transport distance to the mixing point when several weigh feeders are installed.

1.7.3 Monitoring Functions

The *Loss-in-Weight Controller* is supplied with an alarm and indication system. Indication can be in the form of:

- Status Indicators
- Process Alarms
- Programming Errors
- Equipment Failures

If any of the controlled conditions takes place, it is signaled by the lighting of a LED on the front and by a digital output. Using the keypad, you can display all the existing alarms and acknowledge them.

1.7.3.1 Status Indications

- Controller in automatic: The “AUTO” LED is on.
- Controller is in remote set point: The “REM” LED is lighted; the relevant output is closed if the controller is also in automatic mode. This output is used to indicate to external equipment that the controller can be remotely controlled.
- Feeder ready: The “RUN” LED will flash and the relevant output will close when all the conditions listed below become true:

  FEEDER NOT RUNNING
  NO FAILURE ALARM
  NO SHUT DOWN CONDITION
  NO CALIBRATION MODE
  CONTROLLER ON AUTOMATIC MODE
- Feeder running: When the feeder running input contact is closed. The “RUN” LED is lighted.

1.7.3.2 Process Alarms

The following conditions are monitored and may produce alarms or shut the system down. A delay time before the abnormal condition is monitored may be set for each individual alarms.

- High control deviation (above or below set-point)
- High flow rate
- Low flow rate
- High weight
- Low weight
- High positive deviation of control loop 1
- High high positive deviation of control loop 1
- High negative deviation of control loop 1
- High high negative deviation of control loop 1
- High positive deviation of control loop 2

- High high positive deviation of control loop 2
- High negative deviation of control loop 2
- High high negative deviation of control loop 2

Each alarm condition may be set as:

- NONE: Neither alarm nor shut-down
- ALARM: Warning, the feeder continues to run
- SHUT-DOWN: The feeder stops

1.7.3.3 Programming Errors

They may occur only during programming or calibration because of entering data above or below the operating range of the instrument. If data above or below the limits are entered, the system will display a warning message and the minimum/maximum limits will be shown.

1.7.3.4 Equipment Failures

The unit has an internal diagnostic system, which detects the following instrument failures:

- Clock Calendar circuit failure
- Loadcell failure
- RAM failure
- ROM failure
- Power on
- Default constants installed at power on
- Power down during calibration
- Calibration time expired
- General purpose external alarms
- Overflow of Totalizer
- Auto Zero tracking limit
- Load Out deviation
- Communication error
- BCD error
- Mathematical error

1.7.4 Print Functions

Available print functions are:

- Print on command
- Print at pre-selected times of day (up to four)
- Print at pre-selected intervals of time
- Print Set-Up

- Print alarms

1.8 Symbol Identification

Table 1-1 describes the symbols used in this manual and associated drawings.

Table 1-1: Symbol Identification

Symbol	**Description**
	ALTERNATING CURRENT
	EARTH (GROUND) TERMINAL
	PROTECTIVE CONDUCTOR TERMINAL
	CAUTION, RISK OF ELECTRIC SHOCK
	CAUTION (REFER TO ACCOMPANYING DOCUMENTS)

1.9 Technical Specifications

Enclosure

Field Mount

NEMA 4X (IP65), dust and watertight
17 x 13 x 7 inches
Fiberglass reinforced polyester
2 position-mounting feet
Steel chassis providing EMI/RFI shielding

Panel Mount

Size: 12 x 4 x 7.5 inches
Material: Chromated mild steel

Environmental Conditions

Mounting

Should be mounted as close to the loadcells as possible without being exposed to excessive heat or moisture
Field Mount suitable for mounting outdoors

Temperature (Ambient)

Storage: -40° to +158° F (-40° to +70° C)
Operating: +14□ to +122□ F (-10□ to +50□ C)

Relative Humidity

Up to 95%, non-condensing

Pollution Degree

2

Altitude

Up to 6,561 ft (2000m)

Power Requirements

Voltage Range

Nominal voltage +10%, -15%

Nominal Voltage

115/230 VAC, selectable

Nominal Frequency

50/60 Hz

Fusing

400mA Slo-Blo, 110/120 VAC, Type T
200mA Slo-Blo 220/240 VAC, Type T

Power Consumption

50 VA max

Maximum Non-Destructive Input Voltage
150/300 VAC for 1 minute

Over voltage Category
Category II

DC Power Supply

Auxiliary Power Supply Output (Alarm Contacts, etc.)

Output voltage:	24 VDC
Isolation:	Yes – 500 volts
Output ripple:	1.0 V peak to peak typical
Output current:	600 mA maximum

Short circuit protection

Loadcell (Weight)

Loadcell input circuits

Number:	Up to six (6) 350-ohm loadcells in parallel Cable distance 200 ft or less (3000 ft with sense)
Sensitivity:	0.5mV/V to 3.5 mV/V (keyboard selectable)
Input Impedance:	100 k-ohm minimum
Maximum Usable Signal:	114% of 3mV/V
Displayed A/D counts	(3mV/V): 112368
Isolation:	Non-isolated
Max non-destructive input voltage:	± 6 V relative to ground
Loadcell Cable Shield:	Connected to earth ground

Loadcell Excitation Power Supply

10 VDC ±10%, 220 mA
Minimum load impedance (operating) 58 ohms
Output short circuit, 1.5 A maximum

Excitation-Sense Circuitry

6 Wire System; cable distance over 200 ft. (not to exceed 3000 ft.).

Nominal input voltage:	±5 VDC (10 volts)
Input impedance:	100 k-ohm minimum
Jumper selectable:	Local or remote sense

Current Output

1 current output on Motherboard

Output range: User selectable 0 – 20 mA or 4-20 mA, representing 0 to 100% variable.

Resistive load:	800 ohm max. Loop
Capacitive load:	No limit

Analog I/O Board (B)

(2) High level input

Type: Differential voltage input. (0-20mA or 4-20mA with internal resistor, jumper selectable)

Range: 0-5V, or ±V, programmable

Maximum usable input voltage: 106% of full scale

Non –isolated

Maximum non-destructive input voltage: 12V peak

(2) Current Outputs

Optically isolated

Isolated power source

Voltage output by adding an internal dropping resistor

Output range: User selectable 0-20mA or 4-20mA, representing 0 to 100% variable.

Resistive load: 800 ohms maximum

Capacitive load: no limit

Standard Communication

Serial Interface

Type:	Conforms to RS-232C, RS-485/422, and 20 mA standards; supports 2 and 4 wire multi-drop in RS-485. 20 mA loop is passive ONLY.
Interfacing:	RS-485 supports 2-wire or 4-wire multi-drop networking; RS 232 C provides support for modem.
Data rate:	300 to 19200, operator selectable from the keyboard.
Data Format:	Asynchronous, bit-serial, selectable parity, data length, and stop bits.
Optical Isolation:	250 VRMS max.
Input Voltage:	±30 Vdc max (RS-232C)
	±15/-10 Vdc max. (RS-485)
Cable Length:	50 feet max. (RS-232C)

4000 feet max (Rs-485 and 20 mA)

Chapter 2
Installation

This chapter describes the *Loss-in-Weight Controller* installation procedure, hardware configuration, and initial programming. Initial programming is a machine directed procedure prompting the operator to enter required conveyor and loss-in-weight parameters. After all parameters have been entered, the *Loss-in-Weight Controller* performs an unassisted zero and span calibration.

2.1 Safety Precautions

CAUTION

DO NOT INSTALL, OPERATE, OR PERFORM ANY MAINTENANCE PROCEDURES UNTIL YOU HAVE READ THE SAFETY PRECAUTIONS THAT FOLLOW.

CAUTION

DO NOT CONNECT POWER TO THE ELECTRONICS OR TURN ON THE UNIT UNTIL YOU HAVE READ AND UNDERSTAND THIS ENTIRE MANUAL. THE PRECAUTIONS AND PROCEDURES PRESENTED IN THIS MANUAL MUST BE FOLLOWED CAREFULLY IN ORDER TO PREVENT EQUIPMENT DAMAGE AND PROTECT THE OPERATOR.

WARNING

THE *INSTRUMENT* DOOR SHOULD ALWAYS REMAIN CLOSED DURING OPERATION, AND ONLY OPENED FOR MAINTENANCE PROCEDURES. BE SURE TO CLOSE THE COVER BEFORE RESUMING OPERATION.

WARNING

ALL SWITCHES (SUCH AS CONTROL OR POWER) MUST BE OFF WHEN CHECKING INPUT AC ELECTRICAL CONNECTIONS, REMOVING OR INSERTING PRINTED CIRCUIT BOARDS, OR ATTACHING VOLT METERS TO THE SYSTEM.

INCOMING VOLTAGES MUST BE CHECKED WITH A VOLTMETER BEFORE BEING CONNECTED TO THE ELECTRONICS.

WARNING

EXTREME CAUTION MUST BE USED IN TESTING IN, ON, OR AROUND THE ELECTRONICS, PC BOARDS, OR MODULES. THERE ARE VOLTAGES IN EXCESS OF 115 V OR 230 V IN THESE AREAS. AVOID HIGH VOLTAGE AND STATIC ELECTRICITY AROUND THE PRINTED CIRCUIT BOARDS.

WARNING

MAINTENANCE PROCEDURES SHOULD BE PERFORMED *ONLY* BY QUALIFIED SERVICE PERSONNEL AND IN ACCORDANCE WITH PROCEDURES/INSTRUCTIONS GIVEN IN THIS MANUAL.

WARNING

DURING MAINTENANCE, A SAFETY TAG (NOT SUPPLIED BY THERMO SCIENTIFIC) SHOULD BE DISPLAYED IN THE ON/OFF SWITCH AREAS AS A PRECAUTION INSTRUCTING OTHERS NOT TO OPERATE THE UNIT.

WARNING

ONLY QUALIFIED SERVICE TECHNICIANS SHOULD BE ALLOWED TO OPEN AND WORK IN THE ELECTRONICS, POWER SUPPLY, CONTROL, OR SWITCH BOXES.

WARNING

THIS EQUIPMENT SHOULD NOT BE OPERATED OR UTILIZED IN APPLICATIONS OTHER THAN THOSE STATED IN THE ORIGINAL ORDER.

TO ADAPT PRODUCTION RATES OR APPLICATIONS, CONSULT *THERMO SCIENTIFIC* PRODUCTS *CUSTOMER SERVICE* FOR RECOMMENDATIONS.

WARNING

ALL PANELS COVERING THE ELECTRONICS MUST BE IN PLACE AND TIGHT BEFORE WASH DOWN PROCEDURES. DAMAGE TO THE ELECTRONICS COULD RESULT FROM WATER, MOISTURE, OR CONTAMINATION IN THE ELECTRONICS HOUSING.

2.2 Incoming Power

CAUTION

VERIFY THAT THE INPUT VOLTAGE IS CORRECT WITH AN AC VOLTMETER BEFORE YOU CONNECT IT TO THE *INSTRUMENT*.

CAUTION

EARTH GROUND MUST BE PROVIDED TO THE *INSTRUMENT*. DO NOT USE CONDUIT TO PROVIDE THIS GROUND.

CAUTION

A READILY ACCESSIBLE DISCONNECT DEVICE SHALL BE INCORPORATED IN THE FIELD WIRING. THIS DISCONNECT DEVICE SHOULD BE IN EASY REACH OF THE OPERATOR AND IT MUST BE MARKED AS THE DISCONNECTING DEVICE FOR THE EQUIPMENT.

2.2.1 Critical Wiring Conditions

1. Ensure power is off at the mains
2. Do not route loadcell and signal cables in the same conduit with power cables or any large source of electrical noise.
3. Earth ground all enclosures and conduits. A ground connection between all conduits is required.
4. Connect the shields *ONLY* where shown.
5. Check that all wires are tight in their connections.
6. Never use a “megger” to check the wiring.
7. A readily accessible disconnect device shall be incorporated in the field wiring. This disconnect should be in easy reach of the operator and it must be marked as the disconnecting device for the equipment.
8. All conduits should enter the bottom of the enclosure. Do not run conduit through the top or sides of the enclosure.

2.3 Field Mount Installation

The field mount *Loss-in-Weight Controller* should be mounted in a controlled environment not be exposed to excessive vibration, heat, or moisture, and protected from direct sunlight. The *Loss-in-Weight Controller* may be mounted up to 3,000 feet from the loadcells.

2.3.1 Mounting

Mount the *Loss-in-Weight Controller* to a rigid, flat, vertical surface using four mounting holes provided on the back of the enclosure. Care should be taken to ensure the mounting surface is flat so as not to twist or warp the fiberglass enclosure when tightening the mounting bolts.

Figure 2-1: Typical Micro-Tech 3104 Installation

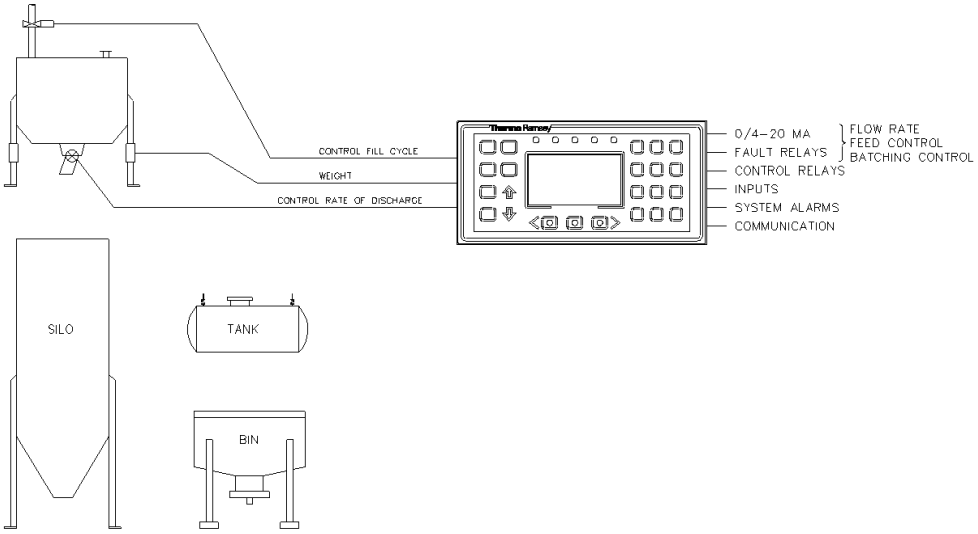

A90517

Figure 2-2: Electrical and Mounting Guidelines of the Micro-Tech Model 3104 (Field Mount) *Loss-in-Weight Controller*

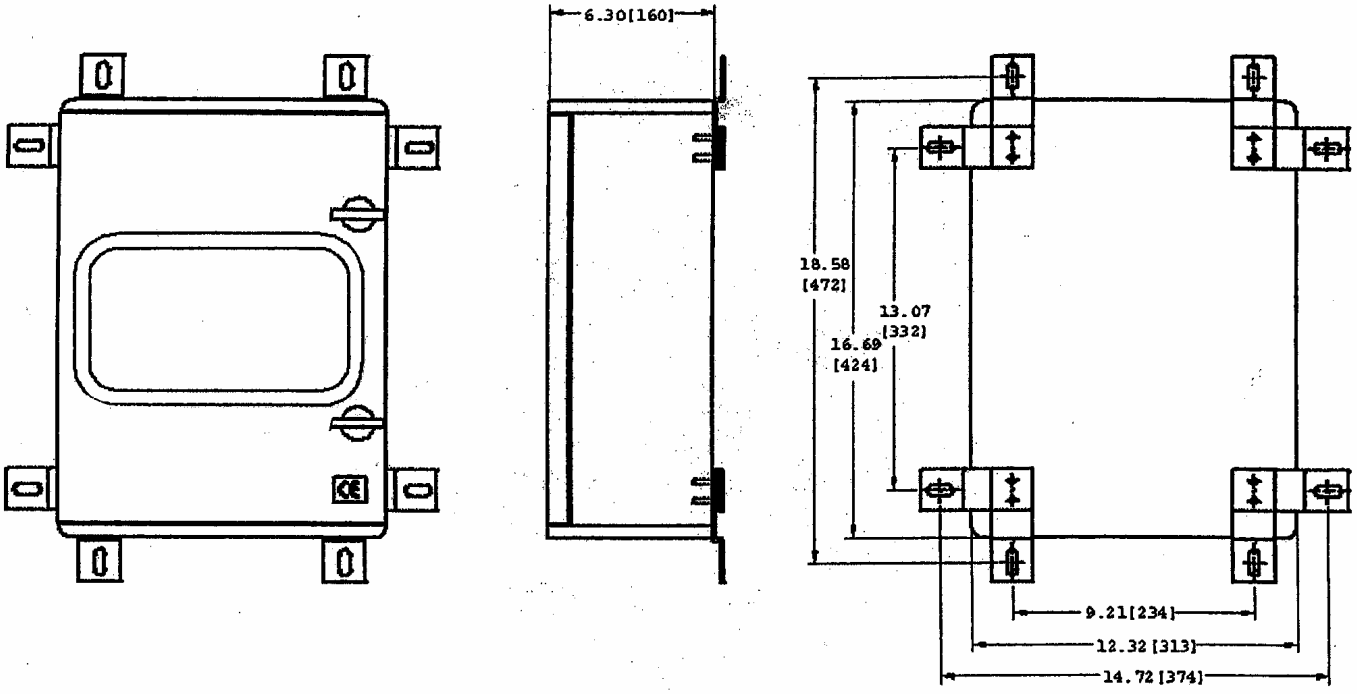

CAUTION

REFER TO THE FIELD WIRING DIAGRAM AS A GUIDE IF YOU DO NOT HAVE A SPECIFIC WIRING DIAGRAM FOR YOUR SYSTEM. FOLLOW YOUR LOCAL

ELECTRICAL CODES AND REGULATIONS FOR MINIMUM WIRE SIZE AND ROUTING.

2.3.2 Connecting Incoming Power - Field Mount

To connect the incoming power, use the following procedure.

Note: **All units shipped from the factory are configured for 115 VAC. If you desired 230 VAC, make sure the power selector switch is set to 230 VAC (*Section 2.5.1*).**

1. Loosen the screw latch mounted on the front chassis. Open the door (see Figure 2-3).
2. Route incoming power wiring through a conduit hole at the bottom right of the enclosure. Leave ample loose wiring (typically 8”) to facilitate removing the terminal connectors.
3. Wire safety ground terminal located on the side of the chassis.
4. Wire HOT to Terminal L on *Power Input Terminal*.
5. Wire NEUTRAL to Terminal N on *Power Input Terminal.*
6. If additional I/O is required at the line voltages, these wires should be routed through a conduit hole on the bottom right of the enclosure. Leave ample loose wiring (typically 8”) to facilitate removing the terminal connectors.
7. All additional field wiring operation at voltages less then 30 V must be located on the left bottom of the enclosure. Leave ample loose wiring (typically 8”) to facilitate removing the terminal connectors.
8. Close the inside panel and tighten the screw to secure the cover.

Figure 2-3: Field Mount Inside Front Panel

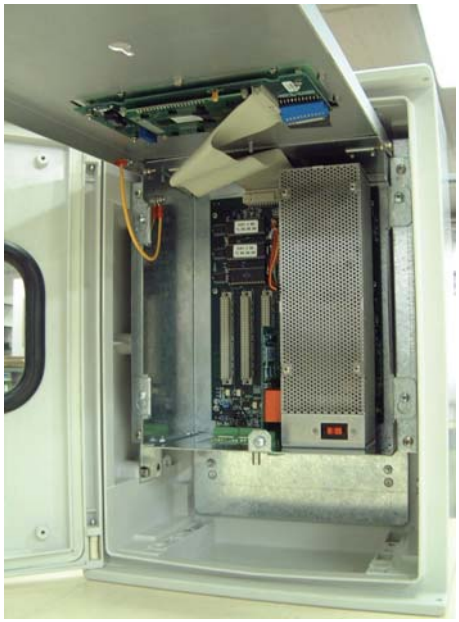

A90869

2.4 Panel Mount Installation

The panel mounted *Loss-in-Weight Controller* is suitable for mounting in a control panel. The control panel should not be exposed to excessive vibration, heat, or moisture. The front bezel, when properly seated, forms a dust seal.

A two (2) inch clearance around the top and bottom of the *Loss-in-Weight Controller* is required for convection cooling. Additional clearances may be required if equipment mounted directly below generates excessive heat. Clearance in the back is necessary for wiring access and fuse replacement. Clearance on the side is necessary for inserting the chassis holding brackets from the back after insertion of the *Loss-in-Weight Controller*.

2.4.1 Mounting

Provide a cutout in the panel and insert the *Loss-in-Weight Controller* after removing the holding brackets. From the back, insert the holding brackets on both sides of the instrument. Tighten the holding brackets to support the *Loss-in-Weight Controller* and form the dust seal.

Figure 2-4: Electrical and Mounting Guidelines *Micro-Tech 3104* (Panel Mount)

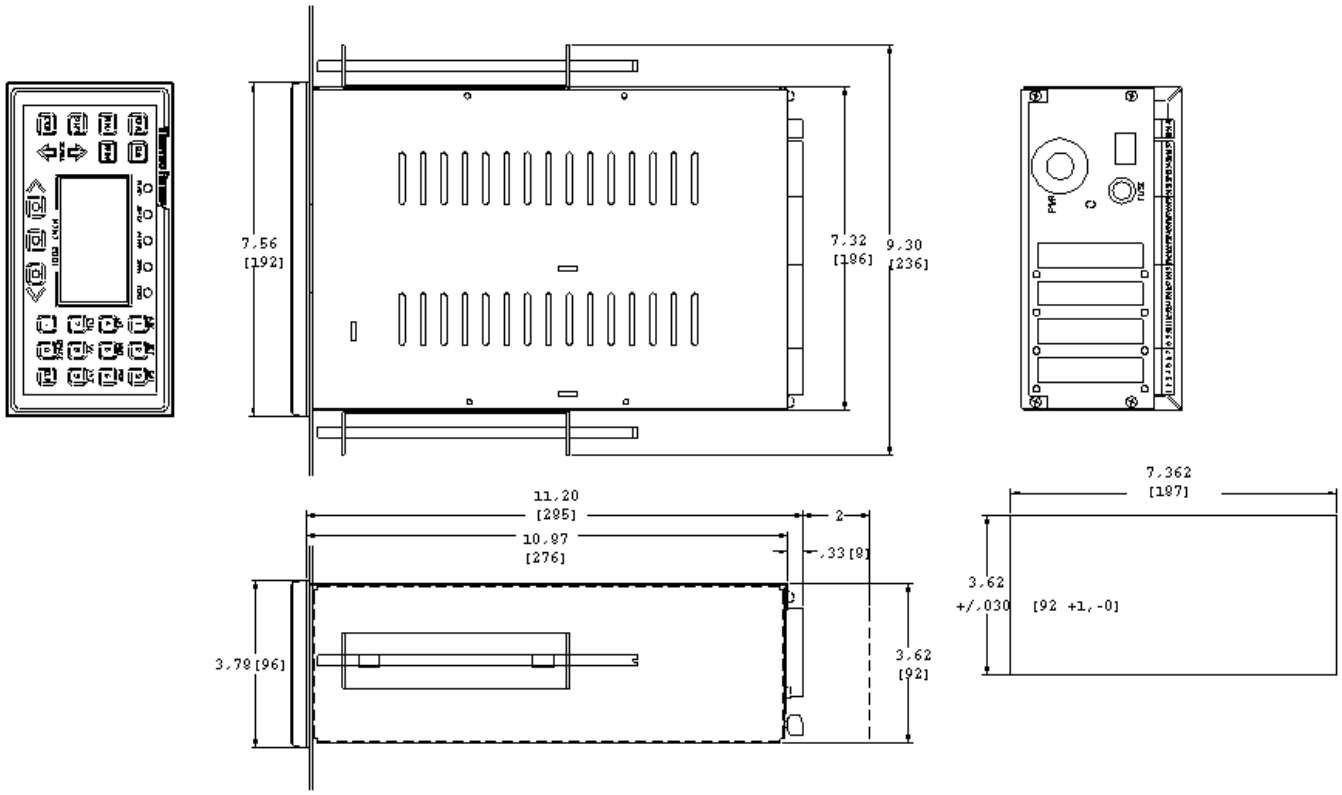

A90851

Figure 2-5: Installation *Micro-Tech Model 3104* (Panel Mount)

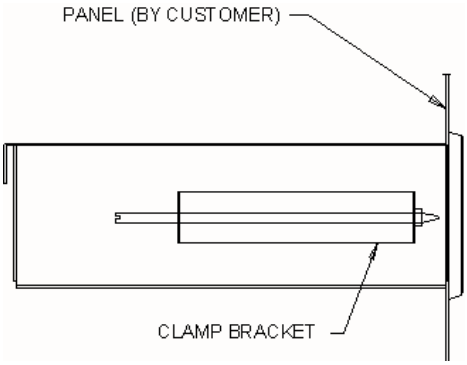

A00884

- See Figure 2-4 for panel cutout, outline, and mounting dimensions.
- The large rubber band shipped with the unit can be used to hold clamp brackets in place during installation.

Remove clamp brackets and slide chassis assembly through front of cut-out. Re-install clamp brackets into chassis and tighten threaded rods against the back of the panel until the unit is secure.

2.4.2 Connecting Incoming Power – Panel Mount

To connect incoming power for panel mount installation, use the following procedure.

Note: **All units shipped from the factory are configured for 115 VAC. If 230 VAC is desired, refer to *Section 2.5.1*, motherboard *configuration Jumpers and Switches*.**

- For input power, use 14 AWG standard wire
- Wire the safety ground terminal located on the right backside of the enclosure.
- Wire the HOT to terminal labeled 1 of Terminal L on the Power Input Terminal.
- Wire the NEUTRAL to the terminal labeled 2 of Terminal N on the Power Input Terminal.

2.5 *Loss-in-Weight Controller* Configuration

The *Micro-Tech 3104* is one of a family of products that is supported by a common hardware platform. Configuration of the hardware platform and additional circuit boards enable the shareware platform to be used for several discrete instruments.

Wire jumpers are installed at the factory for the instrument ordered and should not have to be reconfigured in the field.

Switches and removable jumpers are described in this section. The default position is noted in each description and, in most cases, is not changed.

2.5.1 Mother Board Configuration Jumpers and Switches

TO BE PERFORMED BY QUALIFIED SERVICE PERSONNEL ONLY.

1. *General Purpose Digital Inputs*

   Located on the motherboard are provisions for 5 programmable status inputs. The programmable inputs may be configured as normally open or normally closed. Inputs are designed for dry contacts.

   Input 1 may also be used as a speed senor input. Refer to Table 2-1 for configuration information.

Figure 2-6: Micro-Tech Motherboard

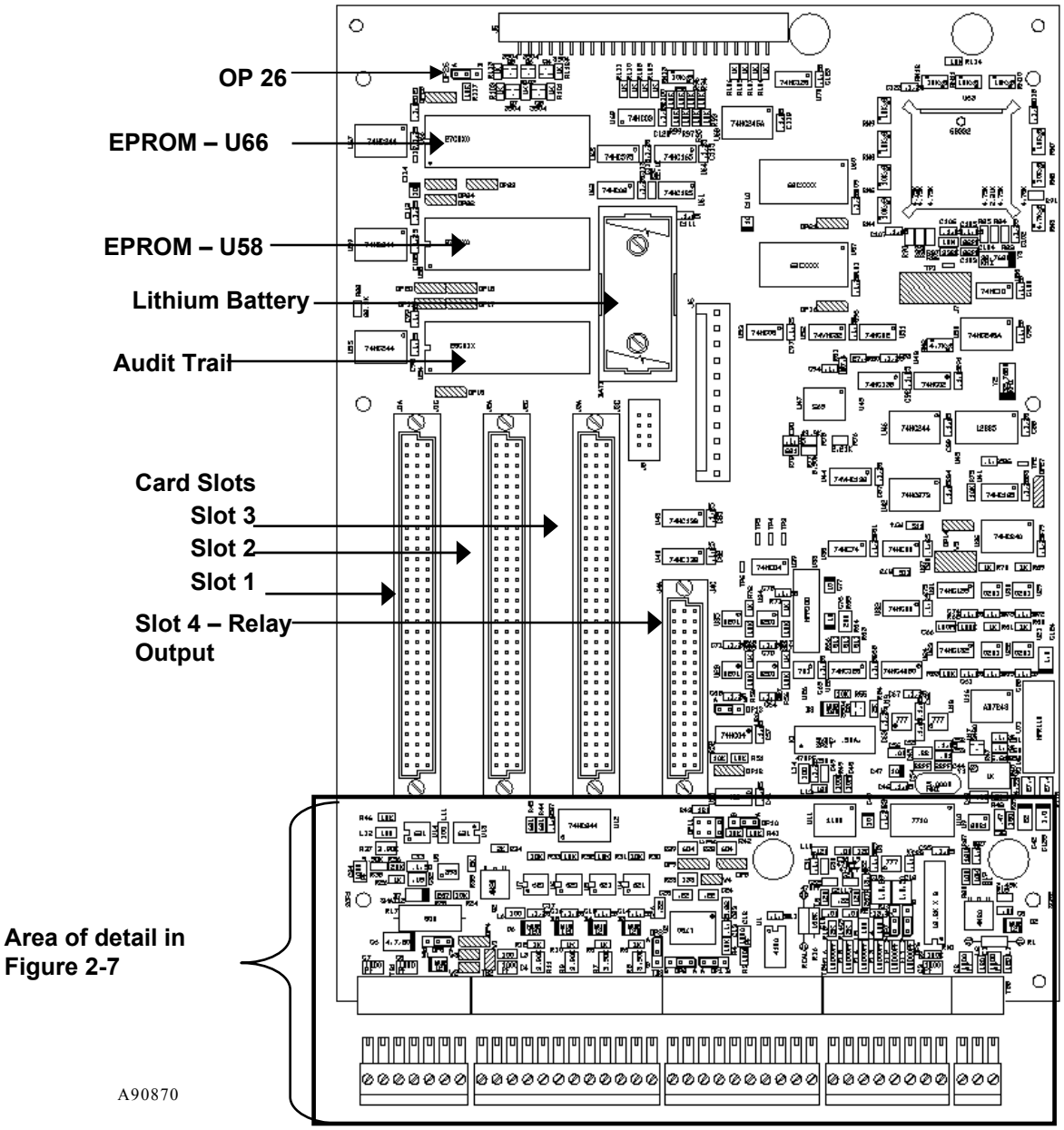

Table 2-1: Programmable Input Choices

External Alarm 1	Refill S1
External Alarm 2	Refill S2
External Alarm 3	Loc/Rem Control
Reset Alarm	Loc/Rem Control S1
Print	Loc/Rem Control S2
Print S1	Auto/Man Control
Print S2	Auto/Man Control S1
Reset Tot	Auto/Man Control S2
Reset Tot S1	Running
Reset Tot S2	Running S1
Refill	Running S2

2. *Digital Outputs*

A relay output board (all dry contacts) and is plugged into slot 4 of the motherboard. One of the relay outputs is permanently assigned as the fault output and cannot be programmed to any other function. The other 3 relays can be programmed to one of the choices shown below in either a normally open or normally closed position.

There is an additional solid-state output (located on the motherboard), which can also be programmed to one of the functions shown below.

The programmable output choices are listed in Table 2-2.

Table 2-2: Programmable Output Choices

Alarm Cumulative	High Deviation Positive S1
Shutdown Cumulative	High Deviation Positive S2
Ready	High Deviation Negative
Refill	High Deviation Negative S1
Refill S1	High Deviation Negative S2
Refill S2	Loc/Rem
High Weight	Loc/Rem S1
High Weight S1	Loc/Rem S2
High Weight S2	Auto / Manual
Low Weight	Auto / Manual S1
Low Weight S1	Auto / Manual S2
Low Weight S2	Increase
High Rate	Increase S1
High Rate S1	Increase S2
High Rate S2	Decrease
Low Rate	Decrease S1
Low Rate S1	Decrease S2
Low Rate S2	Totalizer
High Deviation Positive	Totalizer S1
	Totalizer S2

Additional outputs can be selected by adding additional DIO boards.

2.5.2 A/D Jumpers – Loadcell Sense

Loadcell sense is controlled by selectable jumpers OP6 and OP7 located on the motherboard (Figure 2-7). The jumpers should be in position “A” local sense if the distance is less than 200 feet between loadcell and *Loss-in-Weight Controller*.

For distances greater than 200 feet and less than 3,000 feet, the jumper should be in position “B”. A special 6-wire cable is required. Refer to the field-wiring diagram for jumper requirement in the loadcell junction box.

Table 2-3: Loadcell Jumper Settings

LOADCELL JUMPERS			
Mode	OP6	OP7	
Less than 200 feet	“A”	“A”	**DEFAULT**
Greater than 200 feet	“B”	“B”	

Figure 2-7: Area of Detail

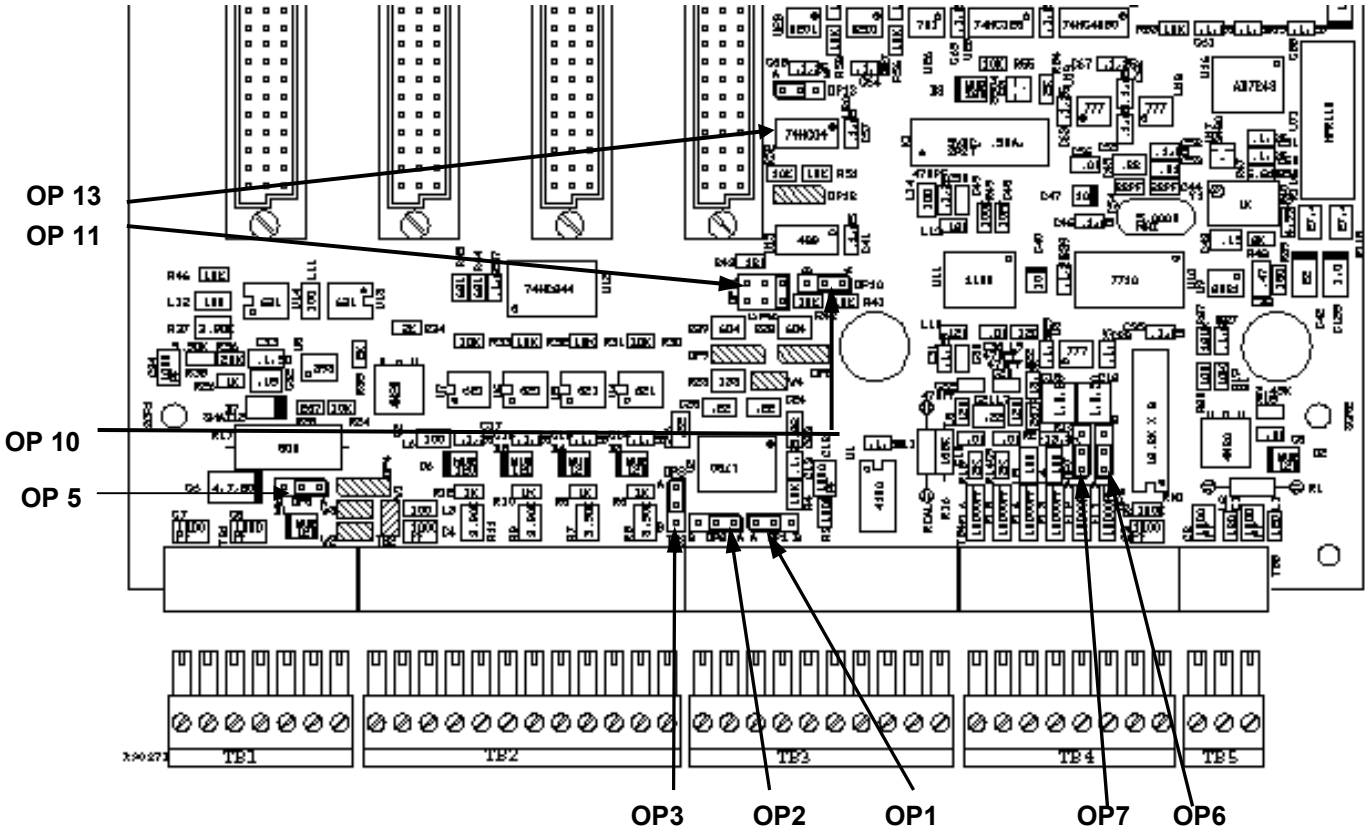

Table 2-4: Micro-Tech 3104 Motherboard Jumpers

Jumper Location	Foil/Jumper	Default Position	Description
OP1	Jumper	A	Comm A=RS-485/20mA B=RS-232
OP2	Jumper	A	Comm A=RS-485/20mA B=RS-232
OP3	Jumper	A	Comm A=RS-485/20mA B=RS-232
OP5	Jumper	A	SPU Contact Closure Input (Slow Speed)
OP6	Jumper	A	Sense Jumper A = Less than 200 ft B= Greater than 200 ft
OP7	Jumper	A	Sense Jumper A = Less than 200 ft B= Greater than 200 ft
OP10	Jumper	A	Comm A = RS-485/232 B = 20 mA
OP11	Jumper	A	Comm A = Terminated B = Not Terminated C = 20 mA
OP13	Jumper	A	Comm A = Normal B = Multidrop
OP26	Jumper	A	OIML Calibration Jumper A = Allows Cal B = Restricts Cal

Table 2-5: Terminal Wiring Configurations

TB1 Digital Input/Out		
Input #1	Sig	2
	Com	1
		3
		4
Output #4	+ 24 VDC	5
	SIG	6
	COM	7

TB2 Digital Input		
8	+24 V	
9		
10	Shield	
11		
12	Sig	In2
13	Com	
14	Sig	In3
15	Com	
16	Sig	In4
17	Com	
18	Sig	In5
19	Com	

TB3 COMM
Table 2-7
Table 2-9
Table 2-10

TB4 Loadcells	
37	Shield
36	
32	+Exc
33	-Exc
34	+Sense
35	-Sense
30	+Sig
31	-Sig

TB5 Analog Out Motherboard	
38	+
39	-
40	Shield

Analog (TB4) In/Out Board	
2	+ Out 2
3	-
1	Shield
9	+ Out-3
10	-
4	+ In-1
5	-
8	Shield
6	+ In-2
7	-

Table 2-6: Relay Output Board

Micro-Tech 3000		
Relay Output Board		
1	NC	Relay K1 Fault Output
2	COM	
3	NO	
4	NC	Relay K2 Output #1
5	COM	
6	NO	
7	COM	Relay K3 Output #2
8	NO	
9	COM	Relay K4 Output #3
10	NO	

*Relays Rated 33 VAC 0.5A, 70VDC 0.5A

2.5.3 Analog Output (Motherboard)

A current output signal is available for customer use on motherboard *Terminal Block 5*. The rate, speed, load parameters, control, level can be selected by the customer to be sent to a rate meter, recorder, or controller. The output range is adjustable from 0-20 mA, 4-20 mA, 20-0 mA, or 20-4 mA.

Table 2-7: Motherboard Current Output - TB 5

Motherboard Current Output #1 TB5	
38	+
39	-
40	Shield

2.5.4 Analog Input/Output Board

The analog input/output board is available in two configuration described below. (A option) has one current output only; whereas, (B) has two voltage inputs and two current outputs. No configuration switches or jumpers exist on the analog boards. The

Loss-in-Weight Controller is supplied with a type (B) two in / two out analog signal.

The *Loss-in Weight Controller* can support up to four current outputs.

Board type (A) One user definable 0-20/4-20 or 20-4/20-0 mA output.

The Weight, Rate, or Control can be selected by the customer to be sent to a rate meter, recorder, or controller.

Board type (B) Two +/- 5VDC differential inputs and two user definable 0-20/4-20 or 20-4/20-0 mA output

Inputs – The functions that can be selected for each input are: None, Set Point (SP), Moisture Compensation.

Outputs – The function selections for each output are: None, Weight, Rate, or Control.

Table 2-8: Analog (TB4) Input/Output Board

Analog (TB4) In/Out Board	
2	+ Out –2
3	-
1	Shield
9	+ Out –3
10	-
4	+ In-1
5	-
8	Shield
6	+ In-2
7	-

2.5.5 Communications Configuration (Motherboard) COMM

This section describes the setup procedure and hardware configuration for the communications from the motherboard. Use the following steps to configure the communications:

Select the jumper positions for the desired communication standard (see *Table 2-4 and 2-11*). Refer to Figure 2-7 for jumper locations.

1. Wire to the *Terminal Block 3* on the motherboard for the communication standard selected, *RS-485*, *RS-232c*, *20 mA* current loop.
2. Refer to *REC 3949, Chapter 3* for the remainder of the communication setup.

Table 2-9: Motherboard COMM 1 Communications Wiring Configuration - TB3 – RS-485

Motherboard RS-485 Communications TB 3	
25	Shield
29	-RX
28	+Rx
24	Common
21	+TX
20	-TX

Maximum cable length 4000 ft
Use Beldon 9830 or equivalent

Figure 2-8: Motherboard Wiring Configuration TB 3 – RS-232 Communications

Motherboard RS-232 Communications TB 3	
25	Shield
23	CTS
24	Common
22	RxD
21	TxD
20	RTS

Maximum cable length 50 ft
Use Beldon 9538 or equivalent

Figure 2-9: Motherboard Wiring Configuration TB 3 – 20mA Serial Communications

Motherboard 20 mA Serial Communications TB 3	
25	Shield
26	+20 mA (out)
27	-20 mA (out)
28	+20 mA (in)
24	-20 mA (in)

Maximum cable length 4000 ft
Use Beldon 9829 or equivalent

Figure 2-10: Mother Board Communication Jumper Settings

JUMPERS							
Mode	**OP1**	**OP2**	**OP3**	**OP10**	**OP13**	**OP11**	
RS-485	"A"	"A"	"A"	"A"	"A" Normal "B" Multi-drop	"A" Terminated 'B" Not Terminated	Default
RS-232	"B"	"B"	"B"	"A"	"A" Normal	"B" Not Terminated "A" Terminated	**Default**
20 mA	"A"	"A"	"A"	"B"	"A"	"C"	

2.6 Determining Installation Parameters

Following mechanical and electrical installation, it is necessary to

record field data specific to your application into the *Micro-Tech 3104 Loss-in-Weight Controller* memory. The following setup procedure should be completed before programming your loss-in-weight controller. Refer to Chapter 3 of this manual for more details or assistance.

Before applying power to the system, it is necessary to complete the following statements. Refer to your *System Data Sheet* in the front of your manual.

2.6.1.1 Scale Capacity

Determine the scale's capacity in tons per hour and record the capacity below. (Example: 400.0)

_____(Tons Per Hour) Scale #1

_____(Tons Per Hour) Scale #2

2.6.1.2 Number of Loadcells

Enter the number of loadcells.

_____(Number of Loadcells) Scale #1

_____(Number of Loadcells) Scale #2

2.6.1.3 Loadcell Capacity

From the scale data sheet located in the front of this manual, determine the loadcell size in pounds. Record the weight below. (Example: 250.0)

_____pounds (Loadcell Capacity) Scale #1

_____pounds (Loadcell Capacity) Scale #2

2.6.1.4 Loadcell Sensitivity

From the loadcell nameplate, determine the loadcell sensitivity in mV/V. Record the sensitivity below. (Example 3.000 mV/V)

_____mV/V (Loadcell Sensitivity) Scale #1

_____mV/V (Loadcell Sensitivity) Scale #2

2.6.1.5 Loadcell Resistance

Measure the signal (output) resistance of each loadcell with a digital VOM. Record the resistance below. (Example: 350.000)

_____(Loadcell Resistance) Scale #1

_____(Loadcell Resistance) Scale #2

2.7 Programming the *Micro-Tech 3104 (Initial Setup)*

When power is first applied to the *Loss-in-Weight Controller*, the system steps the operator through menus and options that bring the system to a weighing state. Soft keys, numeric keys, and the scroll control keys are used to select choices. The **RUN** and **MENU** control keys are inactive during this procedure. After successful initial programming and scale calibration, proceed to Main Menu 4, I/O Scroll, and Main Menu 7, Control Scroll, for PID or P.E.I.C. controller setup.

CAUTION

VERIFY 115/230-VOLT SELECTION IS CORRECT. IMPROPER CONNECTION MAY RESULT IN DAMAGE TO YOUR *INSTRUMENT*.

- The programming mode begins the first time power is applied. Information requested by the instructional screens should be entered before moving to the next screen. The scale is calibrated at the end of this procedure provided the correct information is entered. The alarm light flashes during the programming procedure and clears when calibration is complete.

  The programming mode begins with the following instructional screens.

-- MEMORY ERASED --
Chose the language
key to continue to

ESP **USA**

2.7.1 Language

The *Micro-Tech 3104* is a dual language instrument. USA is always the first language. The standard configuration provides *Spanish* (*ESP*) as the second language. Other languages, such as *German* (*GER*), are available upon request (consult factory). Press the desired language.

Initial scale setup
and calibration
Press down SCROLL.

Press the **DOWN SCROLL** key.

Press key under HELP
for more information.

HELP

"HELP" is flashing

Press the **HELP** soft key.

Key with dot (soft
key) performs action of
of word above it.

MORE RETURN

When **RETURN** is pressed, the user is returned to the previous screen. **MORE** advances the system to the next screen.

Press **MORE**

Use down SCROLL key
to advance through the menus

MORE RETURN

Pressing **MORE** or **RETURN** reverts the screen back to previous screens in the series.

Press the **DOWN SCROLL** key.

2.7.2 Measure Units

Press **SCROLL DOWN** to accept the default unit, or **CHOICES** to scroll selections. Press **ENTER** to confirm your selection. Scroll down.

Measure units can be individually selected. The user must first decide if the English units will be used or the Metric ones, or combination of both.

```
-- DISPLAY SCROLL 1 --
Measure units
> English <

CHOICE        ENTER
```

Default: ENGLISH

Choices: ENGLISH, METRIC, MIXED
If English, all units in English
If Metric, all units Metric
If Mixed, units may be a combination of English and Metric

Note**: If the Measure units are changed from English to Metric (or vice versa) after the scale is calibrated, the span number changes but the calibration remains the same.**

2.7.3 Rate Units

The rate is displayed according to the units selected here. Press **ENTER** soft key to accept the default unit, or **CHOICES** soft key to scroll selections. Press **ENTER** to confirm your selection. Scroll down.

```
-- DISPLAY SCROLL 2 --
Rate Units
> Lb/h <

CHOICE        ENTER
```

English/Mixed	**Metric**	**If Mixed**
Default: Lb/h	**Default**: kg/h	**Default**: Lb/h
Choice: Tph, Ltph, T/mn Lb/h, T/mn, LT/m, LTph, Lb/h Lb/mn, kg/h	**Choice**: t/h, kg/h, t/mn, kg/mn,	**Choice**: T/h, kg/h, kg/mn,Tph, T/h, LT/mn, Lb/mn

2.7.4 Weight Units

The weights will be displayed according to the units selected here.

```
-- DISPLAY SCROLL 3 --
Weight Units
>  pounds  <
CHOICE        ENTER
```

English/Mixed **Metric** **If Mixed**
Default: Pounds **Default**: kg **Default**: Pounds
Choice: Perc %, Pounds **Choice**: Perc %,kg **Choice**: Perc %,kg,Tonnes,
Tons, LTons Tonnes Pounds, Tons, LTons.
Press **ENTER** to accept the default unit, or **CHOICES** to scroll selections. Press **ENTER** to confirm your selection. Scroll down.

2.7.5 Total Units

The units to be used for Total are selected here. Press **ENTER** soft key to accept the default unit, or **CHOICES** soft key to scroll selections. Press **ENTER** to confirm your selection. Scroll down.

```
-- DISPLAY SCROLL 4 --
Total Units
>  Tons  <

CHOICE        ENTER
```

English/Mixed **Metric** **If Mixed**
Default: Tons **Default**: Tonnes **Default**: Tons
Choices: Tons, Ltons, Pounds **Choices**: Tonnes, kg **Choices**: Tons, Ltons, kg, Pounds, Tonnes, kg

2.7.6 Number of Scales

The *Loss-in-Weight Controller* can control two independent scales. The number of scales can be programmed according to the number of A/D are installed.

If is available only the A/D (on Motherboard) this scroll is not displayed

```
-- SC DATA SCROLL 1 --
Number of scales
    1
ENTER
```

Default: 1
Min: 1
Max: 2

The scale soft key

Several parameters must be entered for each scale. If you have 2 scales, the SCALE soft key is displayed in the scroll position where data needs to be entered. This keys has double function, first it indicates which scale the

Parameter is referring to. Example: 1 indicates that you are entering a parameter for scale 1. Second, it allows you to change the scale. Pressing the soft key below the indication changes the scale number.

The above symbol will be referred to this manual as Scale #1 or #2.

2.7.7 Max Scale Capacity

The next entry is the scale capacity, which is the maximum capacity of the scale in weight. This entry also defines the default number of decimal places that are used for displaying weight values. Use numeric keys for entering the number, confirm with **ENTER**. Scroll down.

```
-- SC DATA SCROLL 2 --
Max. scale capacity
        100.0
ENTER            SCALE #
```

Default: 100.0
Min: 1
Max: 200000

2.7.8 Scale Divisions

When the Scale capacity is entered, the number of decimal places is also defined. If, for example, the User enters 500.0, this sets the "Scale Divisions" parameter to 0.1. Advancing to the next scroll, the User then sees first the Scale Division corresponding to the just entered Scale Capacity (in the example 0.1). If required, the User is able to alter the Scale Division to any of the available options.

Press the **ENTER** soft key to accept the default divisions, or the **CHOICES** soft key to scroll selections. Press **ENTER** to confirm your selection. Scroll down.

```
-- SC DATA SCROLL 3 --
Scale Divisions
>      0.1     <

CHOICE  ENTER     SCALE #
```

Default: 0.1
Choice: 0.1, 0.2, 0.5, 1, 2, 5, 10, 20, 50, 0.01, 0.02, 0.05, 0.001, 0.002, 0.005

2.7.9 Loadcells Number

Enter the number of loadcells of your scale.

```
-- SC DATA SCROLL 4 --
# of load cells
      1
ENTER           SCALE #
```

Default: 1
Min: 1
Max: 6

2.7.10 Defining Loadcell (s)

Enter the *loadcell capacity* as it appears on the label placed on the loadcell.

```
-- SC DATA SCROLL -5-
Load cell capacity
250.0   Lbs

ENTER           SCALE #
```

If **English** or **Mixed:**
Default: 250.0 Lbs
Min: 10 Lbs
Max: 15000 Lbs

If **Metric**
Default: 100 kg
Min: 1 kg
Max: 5000 kg

Enter the *loadcell sensitivity* in mV/V as marked on the label of the loadcell. *Thermo* loadcells are normally 2.000 or 3.000 mV/V.

```
-- SC DATA SCROLL -6-
Load cell sens.
3.000   mV/V

ENTER          SCALE #
```

Default: 3.000 mV/V
Min: 0.500 mV/V
Max: 3.500 mV/V

Loadcell resistance is entered on this screen. The resistance for the loadcell has been recorded on the System Data Sheet in the front of your loss-in-weight controller manual. (It is also stamped on the loadcell cable.) Enter the ohms for the loadcell. The number of scrolls depends on the number of loadcells installed.

```
-- SC DATA SCROLL –7A-
Load cell #1
Res     350.000   Ohms

ENTER          SCALE #
```

Default: 350 Ohms
Min: 10 Ohms
Max: 2000 Ohms

- If # of Loadcells is more than 2:

```
-- SC DATA SCROLL –7B-
Load cell #2 res
Res   350.000   Ohms

ENTER          SCALE #
```

Default: 350 Ohms
Min: 10 Ohms
Max: 2000 Ohms

- If # of Loadcells is more than 3:

```
-- SC DATA SCROLL –7C-
Load cell # 3 res
Res    350.000    Ohms

ENTER          SCALE #
```

Default: 350 Ohms
Min: 10 Ohms
Max: 2000 Ohms

- If # of Loadcells is more than 4:

```
-- SC DATA SCROLL –7D-
Load cell # 4 res
Res    350.000    Ohms

ENTER          SCALE #
```

Default: 350 Ohms
Min: 10 Ohms
Max: 2000 Ohms

- If # of Loadcells is more than 5:

```
-- SC DATA SCROLL –7E-
Load cell # 5
Res    350.000    Ohms

ENTER          SCALE #
```

Default: 350 Ohms
Min: 10 Ohms
Max: 2000 Ohms

- If # of Loadcells is 6:

```
-- SC DATA SCROLL –7F-
Load cell #6
Res    350.000    Ohms

ENTER          SCALE #
```

Default: 350 Ohms
Min: 10 Ohms
Max: 2000 Ohms

2.7.11 Defining the Lever Ratio

```
-- SC DATA SCROLL –8-
Lever Ratio
    1.000

ENTER          SCALE #
```

Default: 1.000
Min: 0.100
Max: 5.000

2.7.12 Quick Automatic Calibration of the Scale (s)

The system performs a quick calibration of the scale (s). The scale is first zeroed (3 seconds) and than calibrated using the loadcell capacity, sensitivity, and lever ratio just entered. During this time, the following screen is displayed:

```
CALIBRATION IN
PROGRESS
```

When calibration procedure is completed, the following message in displayed for 3 seconds:

```
S1  CALIBRATED
S2  CALIBRATED
```

In case the loadcell is not connected or a failure is detected, the message is "**S# NOT CALIBRATED**".

Then the following message is displayed

```
Press RUN to start
or MENU for scrolls
```

The field data entered during this procedure enabled the loss-in-weight controller to perform an unassisted zero balance and span calibration. Assuming no mistakes were made, the scale is calibrated and is ready for use at this time.

NOTE:

The span number was calculated from the data that was entered during this initial calibration setup procedure. Verify this by performing a span calibration procedure.

****

THIS PAGE LEFT BLANK INTENTIONALLY

****

Chapter 3 Operations

Your *Thermo Scientific Loss-in-Weight Controller System* is capable of accurate weighing, provided it is installed, calibrated, operated, and maintained in complete accordance with the instructions contained in this manual.

3.1 Overview

Micro-Tech 3104 Loss-in-Weight Controller is a microcomputer-based instrument that accepts and conditions weight signals from one or two scales, and provides visual and electrical outputs for total weight. A stable 10-volt DC excitation voltage capable of exciting up to six strain gauge loadcells is produced by the *Loss-in-Weight Controller*. Sense lead terminations are also provided for six wire loadcell cables.

The *Loss-in-Weight Controller* output can be PID, PID + S or PEIC control. PEIC control can be an analog output or time proportional “increase / decrease” digital.

Life expectancy of the RAM support battery is approximately ten years, if power is not applied. Under normal operation where power is on continuously, life expectancy is much longer.

Errors may occur during initial calibration and their reason must be corrected during initial calibration. During normal operation, an error would most likely indicate a failure in system or improper operation.

3.2 Operator Interface

This section provides information about setting up and operating the *Micro-Tech 3104*. All operations are performed from the front panel of the electronic enclosure.

- The operator interface, including all keys, indicators, and displays.
- Procedures for initial setup and calibration are provided. .
- Detailed operating procedures are also included. All operations are performed from the front panel of the electronic enclosure.

The *Micro-Tech 3104* has been adjusted, configured, and inspected at the factory per the supplied customer data. Additional internal adjustments should not be necessary for satisfactory performance. If adjustments become necessary, refer to *Chapter 4 Micro-Tech 3104 Maintenance*.

Figure 3-1: *Micro-Tech 3104* Front Panel

3.3 Front Panel

The front panel (see Figure 3-1) contains the necessary status indicators and keys to enable the operator to perform calibrations and all required operations after the *Loss-in-Weight Controller* has been configured (see *Section 2.5* for configuration procedures).

Front panel operation, zero calibration, and span calibration are described in this chapter. A detailed description of all menus and their contents are found in *Appendix A*.

The *Loss-in-Weight Controller* front panel display includes the following features:

- System status lights that show the status of the weighing process.
- LCD graphic display
- Keypad

3.3.1.1 System Status Lights

The five red status indicators show the status of the *Loss-in-Weight Controller*.

- *Remote* – (On) when the loss-in-weight controller (or displayed scale if two are defined) is in REMOTE.
- *Auto* – (On) when the loss-in-weight controller (or displayed scale if two are defined) is in AUTOMATIC
- *Alarm* – Alarm indication flashes if an alarm is pending, is NEW, or has been ACKNOWLEDGED.
- *Batch* See Appendix if the option is installed.
- *Ready* – Ready indication turn on if the scale is calibrated (zero and span calibration complete) and no SHUT DOWN conditions are active. If more than one scale is defined, the READY indication refers to the displayed scale.

3.3.1.2 LCD Graphic Display

The LCD graphic display indicates actual running information or displays menu entry information.

3.3.1.3 Keypad

The keypad is comprised of pad touch keys consisting of the following:

- **RUN** – gives access to the **RUN** menu and returns the *Loss-in-Weight Controller* to *Run* mode whenever pressed, see *Section 3.6* for a detailed description of **RUN** menu.
- **MENU** – gives access to the *Micro-Tech 3104* menus
- **UP/DOWN ARROW KEYS** – scrolls up or down in the selected menu.
- **SOFT KEYS** – selects the displayed function directly above the key. Also moves the cursor left and right during string editing.
- **ALPHL/NUMERIC KEYS 1 THROUGH 0** – used to enter letters and numerals when string editing. Similar to a telephone keypad.
- **DECIMAL POINT KEY** – enters a decimal point
- **CLEAR KEY** – removes incorrect entries prior to pressing **ENTER**.
- **LOCAL / REMOTE KEY** – used to change the status of the *Loss-in-Weight Controller* between *LOCAL* and *REMOTE*. If two scales are defined, it affects only the displayed scale. It is inhibited when digital function *LOC/REM* is assigned.
- **AUTO / MAN KEY** - used to change the status of the *Loss-in-Weight Controller* between *AUTOMATIC* and *MANUAL*. If two scales are defined, it affects only the displayed scale. It is inhibited when the digital function *AUTO/ MAN* is assigned.
- **PRINT** – initiates a printout.
- **START** – Starts the load out to batch and restarts if interrupted.
- **STOP** – Interrupt the load out or batch and aborts load if already interrupted.

Note: START/STOP **are only active with *Load Out* or *Batch* option.**

3.4 General Navigation

Navigating the menus is the same throughout the setup and operation of the *Micro-Tech 3104*. To follow are a few general guidelines to help in menu navigation.

- Press the **DOWN SCROLL** key to advance through the menus,
- **UP SCROLL** key to return to the previous item displayed on the screen,
- **RETURN** to go back to the previous menu,
- **CHOICES** soft key to view the choices for a selected menu option, and
- **ENTER** to confirm you menu selection

3.5 Menu Displays

The *Loss-in-Weight Controller* is a menu driven machine that allows the operator to access all setup, test, and calibration parameters. Main menu screens 1 through 7 can be accessed at anytime by pressing **MENU** until the desired menu screen is displayed. Pressing the soft key directly below the desired scroll, and then using the **UP/DOWN** scroll key select menu scrolls.

If the *Loss-in-Weight Controller* is password protected, the appropriate password must be entered prior to making changes or performing routine calibration. Menus may be viewed without entering a password, but no entries are allowed unless the password is entered.

Optional menu scrolls are only available if the option has been installed. The MENU key activates the following screens. See *Appendix A* for detailed description of all menus.

```
--   MAIN MENU 1   --
Press MENU for more
ZERO    SPAN
CAL     CAL      PRINT
```

```
--   MAIN MENU 2   --
Press MENU for more
                SCALE   CALIB
DISPLAY         DATA    DATA
```

```
--   MAIN MENU 3   --
Press MENU for more

PROT      DIAG        TEST
```

```
--   MAIN MENU 4   --
Press MENU for more
I/O       ALARMS    LOAD
DEF.      DEFIN.    OUT
```

```
-- MAIN MENU 5 --
Press MENU for more

COMM A  COMM B  PRINT
                *
```

*Can be AB RIO or PRO DP

```
-- MAIN MENU 6 --
Press MENU for more
AUDIT
TRAIL          LINEAR
```

```
-- MAIN MENU 7 --
Press MENU for more

CONTROL
```

3.6 Normal Power On

When the *Loss-in-Weight Controller* is powered on after initial programming, the Run menu is displayed unless the hardware configuration has been changed.

```
0000.00  Lb/h

TOTALS
```

3.6.1 Hardware Configuration

If the hardware configuration detected at power on differs from the one recorded in memory, the following screen displays. This only happens if a circuit board has been added or removed during power off, or a board has failed.

```
--SLOT #       n CHANGED
Acquire new
configuration?
YES                    NO
```

This screen disappears after 10 seconds if the question is not answered. The *Loss-in-Weight Controller* assumes the answer is **NO**. “HW CONFIG. CHANGED” alarm is on and cannot be reset. The above screen appears each time power is cycled. If a board is removed or added, and this is a permanent change in configuration, answer **YES**.

1. A board is removed and is not replaced:

   The *Loss-in-Weight Controller* cancels from memory the setup data of the board that is removed. If the board is added again, the setup data for the board has to be entered again.

2. A board is added:

   The *Loss-in-Weight Controller* acquires the new hardware configuration. Setup data for the new board must be entered.

Note: Check the setup configuration in the **I/O DEFINITION SCROLL** if an I/O board is removed or added. I/O assignments change when the number of I/O boards change.If the reason for the message is not known, or if the change in configuration is temporary and the operator does not want to lose the original setup, answer NO.

---

1. A board is removed:
2. The *Loss-in-Weight Controller* resumes operation, retaining setup data of the board that was removed. All other boards continue working normally. No change occurs in the I/O Definition.
3. A board is added:
4. The *Loss-in-Weight Controller* resumes normal operation without recognizing the new board.

   If **NO** is pressed, the “HW CONFIG CHANGED” alarm stays on.

3.7 Run Menu

When the *Loss-in-Weight Controller* is normally powered on after initial programming, the Run menu can always be accessed by pressing the **RUN** key on the front panel will always access the **RUN** menu.

The **RUN** menu is a multi screen menu consisting of two scrolls. The scroll **UP** or **DOWN** keys is used to move through the scrolls.

3.7.1 Main Run

The first **RUN** scroll appears after initial programming.

```
R          0000.00   Lb/h

PRINT  TOTALS
```

The first line always displays the RATE. An “R” appears on the left side during the REFILL. The “R” indication flashes during

refill and is steady during the stabilization time at the end of the refill while the system is waiting to restart regulation.

The second and third lines are by default blank, but can be programmed to show:

- The actual weight
- The reset total value
- The master total value
- Date and time
- A bar graph indicator

The fourth line displays the soft keys. The PRINT key is only displayed if the COMM 1 is configured as printer. When pressed, the PRINT key enters the print menu and allows printing. If a second scale is defined, the PRINT key is replaced by the SCALE # key. The Print Menu can be accessed through Main Menu 1.

The TOTALS key scroll between Master Total and Reset Total Reset Total can be reset.

The message ALARM appears if an alarm is pending. The ALARM message flashes and the alarm status indicator also flashes

The second **RUN** Menu appears as follows:

```
R          0000.0  Lb/h
Control     000.0%
   I I I I I I I I ><I I I I I I I I
            ADV
```

The fourth displays the soft keys. The PRINT key is only displayed if a COMM A is configured as printer. When pressed, the PRINT key enters the print menu and allows printing. If a second scale is defined, the print key is replaced by the SCALE # key. The Print Menu can be accessed through Main Menu 1.

The TOTALS key scrolls between Master Total and Reset Total can be reset.

The message ALARM appears if an alarm is pending. The ALARM message flashes and the alarm status indicator also flashes.

Line one is the same as the first Run scroll.

In the second line, the following variables are displayed by pressing the ADVANCE key:

- Control output in percent
- Set point of regulation
- Actual regulation error in percent

Line three is the BAR GRAPH. The bar graph graphically displays the deviation. The bar's range is +/- 10%.

The ALARM and SCALE # keys function the same as the first Run scroll.

3.7.2 Totals

The key below **TOTALS** allows scrolling between Master Total and Reset Total screens.

```
MASTER TOTAL
SINCE    00-00-0000
0000000.0 Tons
```

Master Total cannot be reset. The date is entered during initial programming.

```
RESET TOTAL
SINCE    00-00-0000
000000.0 Tons
         RESET
```

RESET TOTAL can be reset at any time. No password is required for reset.

When the **RESET** key is pressed, the following screen is displayed:

```
Do you wish to clear RESET
total?

YES                    NO
```

Press "**YES**" to clear the total. Press "**NO**" to skip clearing.

3.7.3 Print Key

The **PRINT** key is active if selected in COMM scroll.

The following screen is displayed:

```
                 000.00   Lb/h

        PRINT TOTALS
```

When **PRINT** is pressed, the following screen displays:

```
- PRINTER SCROLL -
COM #1  no data
Start print    TOTALS
PRINT    RETURN    COM
```

Password: Not Required

The second line is the status of the printer:

NO DATA – Indicates the printer is idle, no data is being sent to the printer.

IS RUNNING – Indicates the system is sending data to the printer.

The third line indicates what kind of data is printed, if the PRINT key is pressed. The UP and DOWN keys select between:

TOTALS – Print totals (all scales if more scales are defined)

TOTALS S1 – Print totals scale 1 (only if enable)

TOTALS S2 – Print totals scale 2 (only if enable)

SETUP – Print the loss-in-weight controller setup data (not available in this version)

TRAILS – If audit trails option is active print audit trails data.

Print starts after the PRINT key is pressed.

The COM key allows printer selection if more than one printer is installed.

Examples of data that can be printed:

Print **TOTALS**, default:

If one scale is defined:

TOTALS REPORT
DATE: 11-10-2002
TIME: 8:12a

MASTER TOTAL: 0.00 Tons
RESET TOTAL : 0.00 Tons

If more scales are defined:

TOTALS REPORT
DATE: 11-10-2002
TIME: 8:12a

SCALE 1
MASTER TOTAL: 0.00 Tons
RESET TOTAL: 0.00 Tons

SCALE 2
MASTER TOTAL: 0.00 Tons
RESET TOTAL : 0.00 Tons

Print **ALARM** :

11-10-2002 8:14a

Clock fail

and setup.

Print **AUDIT TRAILS** :

TRAIL RECORD NR. 1
DATE 11-10-2002 TIME 11:59p
VARIABLE scale cap
NEW 400.00
OLD 500.00

TRAIL RECORD NR. 2
DATE 11-11-2002 TIME 11:35p
VARIABLE span
NEW 250000
OLD 300000

TRAIL RECORD NR. 3
DATE 11-11-2002 TIME 11:54p
VARIABLE div (e)
NEW 0.05
OLD 0.1

3.7.4 Alarm Pending

The message **ALARM** displays in the right of the screen if an alarm is pending. The alarm LED also flashes.

The following menu displays after pressing **ALARM**.

```
ALARM          NEW
XXXXXXXXXXXXXXXXX
MM-DD-YYYY       HH:MM
RESET          NEXT
```

- **NEW** indicates an alarm that has not yet been acknowledged. When the operator presses **RESET** to clear the alarm, the alarm disappears *only* if the alarm condition no longer exists.
- **ACK** displays if the alarm is still pending.
- **Next** is used to scroll between the pending alarms.
- The string XXXXXXXXXXXX stands for one of the following alarm conditions:

Table 3-1: Alarm Conditions

Clock Fail	Loadcell Fail
RAM Fail	ROM Fail
High Weight S#	Low Weight S#
High Rate S#	Low Rate S#
Warm Start	Cold Start
P.D. Calibration	Calibrate Time S#
External Alarm 1	External Alarm 2
External Alarm 3	Hardware Configuration Changed
BCD Overflow	Math Error
Printer Error	Communication Error
High Pos. Dev. S#	High high Pos. Dev. S#
High Neg. Dev. S#	High high Neg. Dev S#
Refill Timeout S#	Overflow Totalizer S#
AB RI/O Error	PROFIBUS-DP Error

Refer to *Chapter 4* for more information.

3.8 LOAD OUT

The Load System Menu is visible if the Load Out option is installed. See Load Out, Appendix A, for detailed description of the Load Out option. Press the **DOWN** or **UP** scroll key for access.

```
BATCH #          0  STOP
TOTAL   00000.0  Tons
SETPT   00000.0  Tons
ENTER      CLEAR
```

Password: Operator

BATCH # increments by one after each batch

The status can be: STOP, RUN H, RUN L, WAIT, STABLE

ENTER edits the setpoint

CLEAR zeros the batch counter

The symbol S is displayed if the batch is standing by.

3.9 Calibration

MAIN MENU 1 contains the **CALIBRATION** menu. **MENU 1** is selected by pressing **MENU** until **MAIN MENU 1** displays. Desired calibration scrolls are selected by pressing the soft keys directly below the desired scroll.

```
--     MAIN MENU 1      --
Press MENU for more
ZERO     SPAN
CAL      CAL     PRINT
```

PRINT message is assigned to the right hand soft key only if more than one scale is defined.

3.9.1 Zero Calibration Scroll

The Zero Calibration is implemented as a machine directed procedure

1. **Auto Zero**

   If only one scale defined:

```
--     ZERO CAL      --
Empty scale, then
press START
START    SCALE #
MANUAL
```

Password: Operator

The scale must be kept empty during auto zero. A complete zeroing procedure requires 10 seconds.

Indication S# in the following scrolls will appear only if more than one scale is defined. # represents the active scale number

When **START** is pressed, the following screen is displayed:

```
S#   AUTO ZEROING
Time remaining      0000
Gross:          000.0   W.U.
END        ABORT
```

During *Auto Zero*, weight resolution is 10 times higher than normal. The number of seconds in line 2 corresponds to the time remaining for completing the test.

When zero is reached or END is pressed, the system displays the following screen:

```
S# AUTO ZERO COMPLETE
Error            ±000.00%
Change zero?
YES        NO
```

The word COMPLETE is flashing. The percentage of error is related to the scale capacity.

If **YES** is pressed, the next screen is shown:

```
S#    ZERO # CHANGED
Old zero         #00000
New zero         #00000
RUN       MENU
```

If **NO** is pressed, the next screen is shown:

```
S#    ZERO # UNCHANGED
Old zero         #00000
New zero         #00000
RUN       MENU
```

Note that in this case old zero and new zero are shown equal.

The zero constants are shown in A/D counts.

2. Manual Zero

The *Manual Zero* procedure allows the operator to directly enter the zero constant if known.

```
--     MANUAL ZERO     --
Gross            000.0 W.U.
Zero    #         00000
ENTER     SCALE #
```

Password: Operator

Default: 40000
Min: 0
Max: 120000

3.9.2 Span Calibration Scroll

The span calibration can be done in two different ways: R-CAL or Test Weights. The system allows the operator to select which one of the two methods to be used for normal calibration and calibration's check. The selection is made in **MAIN MENU 2**, **CAL DATA SCROLL 1**.

3.9.2.1 Automatic Span Calibration with R-CAL

Use the following steps to begin an *R-Cal Calibration*:

1. Starting an R-Cal Calibration

The following screen displays

```
     AUTO SPAN R CAL
Empty scale, then
press START
START   SCALE #    MANUAL
```

Password: Operator

When **START** is pressed, the Rcal relay energizes. A half second delay occurs after START for the weight to stabilize.

NOTE**: The operator must ensure that the scale is empty before pressing start.**

2. Executing the Span Calibration

S# in the following scrolls appears only if more than one scale is defined, # represents the active scale number.

Whichever method has been used to start automatic span calibration, after START is pressed, the following screen is displayed:

Entry point when REPEAT is pressed.

```
 S#  AUTOSPANNING
Time remaining   0000
Gross        000.0  W.U.

END     ABORT
```

During Auto Span, the weight resolution is 10 times higher than normal. The entire function takes 10 seconds to be completed; remaining time is displayed in line 2. The END key can be used to conclude the function in less time.

3. Recording the New Span

The system calculates the new span.

```
 S#  AUTOSPAN COMPLETE
Error   +/- 00.00 %
Change span ?

YES        NO      FACTOR
```

The word "COMPLETE" is flashing.

FACTOR key is displayed only if an auto span with test weight has been previously executed.

If YES is pressed, the following screen is displayed:

```
S#   SPAN  #   CHANGED
Old span    #  000000
New span  #   000000
RUN     REPEAT
```

REPEAT moves back to (B) above, and calibration restarts.

If NO is pressed, the following screen is displayed:

```
S#   SPAN  #   UNCHANGED
Old span    #  000000
New span  #   000000
RUN     REPEAT
```

Note**: The Old span and the New span are shown equally because there has been no change to the span**

If FACTOR is pressed, the Rcal factor is computed. The following screen is displayed:

```
S#   FACTOR ACQUIRING
New fact    000000  %
Change factor ?
YES        NO
```

NO moves back to above.

YES acquires new factor. If pressed, the following screen is displayed:

```
S#   FACTOR  CHANGED
Old fact     000000  %
New fact     000000  %
RUN     REPEAT
```

4. Ending an Auto Span Procedure with R-CAL

Press RUN

The Rcal relay is de-energized and the display is locked for 3 seconds.

3.9.2.2 Automatic Span Calibration with Test Weights

1. Starting Span Calibration with Test Weights

```
     AUTO SPAN Weights
Apply Weights then
press START.
START    SCALE#   MANUAL
```

Password: Operator

The operator must apply the test weights on the scale before pressing start.

When START is pressed, the span function begins.

2. Executing the Span Calibration

Indication S# in the following scrolls appear only if more than one scale is defined. # represents the active scale number

After START is pressed, the following screen is displayed:

Entry point when REPEAT is pressed (see below).

```
 S#   AUTOSPANNING
Time remaining    0000
Gross         000.0  W.U.

END      ABORT
```

During Auto Span, the weight resolution is 10 times higher than normal. The entire function takes 10 seconds to be completed; the remaining time is displayed in line 2. The END key can be used to conclude the function in less time.

3.

Recording the New Span

The system calculates the new span based on the result of the test performed with the selected method:

```
 S#  AUTOSPAN COMPLETE
Error    +/- 00.00 %
Change span ?

YES          NO
```

The word "COMPLETE" is flashing.

If Y screen is displayed:

```
S#   SPAN  #   CHANGED
Old span    #  000000
New span  #   000000
RUN     REPEAT   FACTOR
```

FACTOR key is displayed only if an autospan with R-Cal has been previously executed.

REPEAT moves back to (B) above, and calibration restarts.

If NO is pressed, the following screen is displayed:

```
S#   SPAN  # UNCHANGED
Old span    #  000000
New span  #   000000
RUN     REPEAT
```

Note: The Old span and the New span are shown equally because the span has not been officially changed.

If FACTOR is pressed, the R-cal factor is computed. The following screen is displayed:

```
S#   FACTOR ACQUIRING
New fact    000000  %
Change factor ?
YES          NO
```

NO moves back to above.

YES acquires new factor. If pressed, the following screen is displayed:

```
S#   FACTOR  CHANGED
Old fact      000000  %
New fact     000000  %
RUN     REPEAT
```

3.9.2.3 Manual Span

If the span constant is known, the manual span procedure allows the operator to manually change span.

Note: If the span is manually entered, the R-cal factor is set to INVALID.

```
MANUAL SPAN
Gross        000.0  W.U.
Span # 0000000

ENTER    SCALE #    EXIT
```

Password: Operator

Default: 1166667
Min: 500000
Max: 45000000

3.10 Permanent Scroll Record – Setup Scrolls

3.10.1 Main Menu 1 and Main Menu 2

MAIN MENU 1

ZERO SCROLL

Zero # _____

SPAN SCROLL

Span # _____

MAIN MENU 2

DISPLAY SCROLL

1	Measure Units	_____
2	Rate Units	_____
3	Weight Units	_____
4	Total Units	_____
5	Language	_____
6	Run Display, Line 2	_____
9	Run Display, Line 3	_____
10	Display Rate Division	_____
11	Display Rate Damping	_____
12	Display Weight Damping	_____

13	Alternate Scales in RUN	_____		
SCALE DATA SCROLL				
1	Number of Scales	_____		
2	Max. Scale Capacity	_____		
3	Scale Divisions	_____		
4	No. of Loadcells	Scale # 1	Scale # 2	
5	Loadcells Capacity	Scale # 1	Scale # 2	
6	Loadcells Sensitivity	Scale # 1	Scale # 2	
7A	Loadcell Resistance # 1	Scale # 1	Scale # 2	ohms
7B	Loadcell Resistance # 2	Scale # 1	Scale # 2	ohms
7C	Loadcell Resistance # 3	Scale # 1	Scale # 2	ohms
7D	Loadcell Resistance # 4	Scale # 1	Scale # 2	ohms
7E	Loadcell Resistance # 5	Scale # 1	Scale # 2	ohms
7F	Loadcell Resistance # 6	Scale # 1	Scale # 2	ohms
8	Defining Lever Ratio	Scale #1	Scale # 2	

3.10.2 Calibration Data Scroll

CALIBRATION DATA SCROLL			
1	Calibration Mode	Scale # 1	Scale # 2
2	Total Test Weight	Scale # 1	Scale # 2
3	R-Cal: Resistance	Scale # 1	Scale # 2
4	R-Cal Constant	Scale # 1	Scale # 2
5	R-Cal Factor	Scale # 1	Scale # 2
6	Calibration Interval	Scale # 1	Scale # 2
7	Calibration Date	Scale # 1	Scale # 2

3.10.3 Main Menu 3

MAIN MENU 3

PROTECTION SCROLL

1	Protection Level ☐ Prot	☐ None	☐ Ltd

DIAGNOSITCS SCROLL

1	A/D Gross	Scale # 1	Scale # 2
	A/D Net	Scale # 1	Scale # 2
2	Weight on Loadcell	Scale # 1	Scale # 2
2A	Loadcell Output Zero	Scale # 1	Scale # 2
2B	Loadcell Output Span	Scale # 1	Scale # 2
3	Service Password	_____	
4	Operator Password	_____	
5	Software Version	_____	
8	Board Type Slot # 1	_____	
9	Board Type Slot # 2	_____	
10	Board Type Slot # 3	_____	
6	Software Version	_____	
9	Board Type Slot #1	_____	
10	Board Type Slot #2	_____	
11	Board Type Slot #3	_____	

3.10.4 Main Menu 4

MAIN MENU 4

I/O DEFINE SCROLL

1	Current Output #1 Define	_____		
	Current Output #2 Define	_____		
	Current Output #3 Define	_____		
	Current Output #4 Define	_____		
1A	Current Output #1 Range	_____	mA	
	Current Output #2 Range	_____	mA	
	Current Output #3 Range	_____	mA	
	Current Output #4 Range	_____	mA	
1B	Current Output #1 Delay	sec	L	
	Current Output #2 Delay	sec	L	
	Current Output #3 Delay	sec	L	
	Current Output #4 Delay	sec	L	
1C	Current Output #1 Damping	_____	sec	
	Current Output #2 Damping	_____	sec	
	Current Output #3 Damping	_____	sec	
	Current Output #4 Damping	_____	sec	
2	Analog Input #1 Definition	_____		
2A	Moisture Input Calibrate	%	mA	
2B	Moisture Input Calibrate	%	mA	
2A	Remote Setpoint Low	%	mA	
2B	Remote Setpoint High	%	mA	
3	Analog Input #2 Definition	_____		
3A	Moisture Input Calibrate	%	mA	
3B	Moisture Input Calibrate	%	mA	
3A	Remote Setpoint Low	%	mA	
3B	Remote Setpoint High	%	mA	
4	Analog Input Damping	_____	sec	
5	Digital Input Define	Physical Input/Status		

MAIN MENU 4

	External Alarm #1	_____/_____
	External Alarm #2	_____/_____
	External Alarm #3	_____/_____
	Reset Alarms	_____/_____
	Print	_____/_____
	Print S1	_____/_____
	Print S2	_____/_____
	Reset Tot	_____/_____
	Reset Tot S1	_____/_____
	Reset Tot S2	_____/_____
	Refill	_____/_____
	Refill S1	_____/_____
	Refill S2	_____/_____
	Loc/ Rem Control	_____/_____
	Loc/ Rem Control S1	_____/_____
	Loc/ Rem Control S2	_____/_____
	Auto/Man Control	_____/_____
	Auto/Man Control S1	_____/_____
	Auto/Man Control S2	_____/_____
	Running	_____/_____
	Running S1	_____/_____
	Running S2	_____/_____
6	Digital Output Define	Physical Output/Status
	Alarm	_____/_____
	Shutdown	_____/_____
	Ready	_____/_____
	Refill	_____/_____
	Refill S1	_____/_____
	Refill S2	_____/_____
	High Weight	_____/_____

MAIN MENU 4

High Weight S1	_____/_____
High Weight S2	_____/_____
Low Weight	_____/_____
Low Weight S1	_____/_____
Low Weight S2	_____/_____
High Rate	_____/_____
High Rate S1	_____/_____
High Rate S2	_____/_____
Low Rate	_____/_____
Low Rate S1	_____/_____
Low Rate S2	_____/_____
High Deviation Positive	_____/_____
High Deviation Positive S1	_____/_____
High Deviation Positive S2	_____/_____
High Deviation Negative	_____/_____
High Deviation Negative S1	_____/_____
High Deviation Negative S2	_____/_____
HHigh Deviation Negative	_____/_____
HHigh Deviation Negative S1	_____/_____
HHigh Deviation Negative S2	_____/_____
Loc/Rem	_____/_____
Loc/Rem S1	_____/_____
Loc/Rem S2	_____/_____
Auto/Man	_____/_____
Auto/Man S1	_____/_____
Auto/Man S2	_____/_____
Increase	_____/_____
Increase S1	_____/_____
Increase S2	_____/_____
Decrease	_____/_____

MAIN MENU 4		
	Decrease S1	_____/_____
	Decrease S2	_____
	Totalizer	_____
	Totalizer S1	_____
	Totalizer S2	_____
7	BCD Input Variable	_____
7A	BCD Input Polarity	_____
7B	BCD Input Parity	_____
9	Remote Counter Division	_____
10	Remote Counter Pulse	_____

3.10.5 Alarms Scroll

ALARMS SCROLL			
1	High Weight	☐ Yes	☐ No
1A	High Weight Set	_____%	
1B	High Weight Delay	_____sec	
2	Low Weight	☐ Yes	☐ No
2A	Low Weight Set	_____%	
2B	Low Weight Delay	_____sec	
3	High Rate	☐ Yes	☐ No
3A	High Rate Set	_____%	
3B	High Rate Delay	_____sec	
4	Low Rate	☐ Yes	☐ No
4A	Low Rate Set	_____%	
4B	Low Weight Delay	_____sec	
5	High Positive Deviation Alarm	☐ Yes	☐ No
5A	High Positive Deviation Set	_____%	_____sec
6	HHigh Positive Deviation Alarm	☐ Yes	☐ No
6A	HHigh Positive Deviation Set	_____%	_____sec
7	High Negative Deviation Alarm	☐ Yes	☐ No

ALARMS SCROLL

7A	High Negative Deviation Set		%	sec	
8	HHigh Negative Deviation Alarm		☐ Yes		☐ No
8A	HHigh Negative Deviation Set		%	sec	
9	Alarm Set As None		☐ Alarm	☐ Shutdown	☐
	#1	Clock Fail None	☐ Alarm	☐ Shutdown	☐
	#2/4	Loadcell Fail None	☐ Alarm	☐ Shutdown	☐
	#5	RAM Fail None	☐ Alarm	☐ Shutdown	☐
	#6	ROM Fail None	☐ Alarm	☐ Shutdown	☐
	#7/9	High Weight None	☐ Alarm	☐ Shutdown	☐
	#10/12	Low Weight None	☐ Alarm	☐ Shutdown	☐
	#13/15	High Rate None	☐ Alarm	☐ Shutdown	☐
	#16/18	Low Rate None	☐ Alarm	☐ Shutdown	☐
	#19	Warm Start None	☐ Alarm	☐ Shutdown	☐
	#20	Cold Start None	☐ Alarm	☐ Shutdown	☐
	#21	P.D. Calibrate None	☐ Alarm	☐ Shutdown	☐
	#22/24	Calibrate Time None	☐ Alarm	☐ Shutdown	☐
	#25	Ext. Alarm #1 None	☐ Alarm	☐ Shutdown	☐
	#26	Ext. Alarm #2 None	☐ Alarm	☐ Shutdown	☐
	#27	Ext. Alarm #3 None	☐ Alarm	☐ Shutdown	☐
	#28/33	Hdw.Cnfg.Chg. None	☐ Alarm	☐ Shutdown	☐
	#34	BCD Overflow None	☐ Alarm	☐ Shutdown	☐
	#35	Math Error None	☐ Alarm	☐ Shutdown	☐
	#36	Printer Error None	☐ Alarm	☐ Shutdown	☐

ALARMS SCROLL				
#37	COMM Error	☐ Alarm	☐ Shutdown	☐ None
#38/40	High Pos Deviation S#	☐ Alarm	☐ Shutdown	☐ None
#41/43	HHigh Pos Deviation S#	☐ Alarm	☐ Shutdown	☐ None
#44/46	High Neg Deviation S#	☐ Alarm	☐ Shutdown	☐ None
#47/49	HHigh Neg Deviation S#	☐ Alarm	☐ Shutdown	☐ None
#50	Refill Timeout S#	☐ Alarm	☐ Shutdown	☐ None
#51/53	Overflow Totalizer S#	☐ Alarm	☐ Shutdown	☐ None
#59	AB RI/O	☐ Alarm	☐ Shutdown	☐ None
#60	PROFIBUS-DP	☐ Alarm	☐ Shutdown	☐ None

3.10.6 Main Menu 5 and Main Menu 6

MAIN MENU 5

COMM A SCROLL

1	Baud Rate Port #1	_____
2	Set Parity Port #1	_____
3	Stop Bits Port #1	_____
4	Word Length Port #1	_____
5	Protocol Port #1	_____
6	Clear to Send #1	_____
7	Address Port #1	_____
8	Access Prot Port #1	_____
9	Baud Rate Port #2	_____
10	Set Parity Port #2	_____
11	Stop Bits Port #2	_____
12	Word Length Port #2	_____
13	Protocol Port #2	_____
14	Clear to Send #2	_____
15	Address Port #2	_____
16	Access Prot Port #2	_____

PRINT SCROLL

1	Handshaking	_____
2	End of Line	_____
3	Delay End of Line	_____
4	Form Feed	_____
5	Print Interval	_____
6	Print Time #1	_____
7	Print Alarms	_____
8	Totals Report Format	_____
9	String #1	_____
9A	Contents String #1	_____

MAIN MENU 5

9B	Position String Number #1	_____
10	String #2	_____
10A	Contents String #2	_____
10B	Position String #2	_____
11	String #3	_____
11A	Contents String #3	_____
11B	Position String #3	_____
12	Position Date	_____
13	Position Time	_____
14	Position Reset Total	_____
15	Position Master Total	_____
16	Position Weight	_____
17	Position Rate	_____

MAIN MENU 6

AUDIT TRAIL SCROLL

Audit Trails ☐ Yes ☐ No

LINEARIZATION SCROLL		**Scale #1**		**Scale #2**
Linearization		☐ Yes	☐ No	☐ Yes ☐ No
LIN Factor #1	Weight _____	Factor ____	Weight _____	Factor ____
LIN Factor #2	Weight _____	Factor ____	Weight _____	Factor ____
LIN Factor #3	Weight _____	Factor ____	Weight _____	Factor ____
Lin Factor #4	Weight _____	Factor ____	Weight _____	Factor ____
LIN Factor #5	Weight _____	Factor ____	Weight _____	Factor ____

3.10.7 Main Menu 7

MAIN MENU 7

	CONTROL SCROLL	**Scale #1**	**Scale #2**
1	Start Out	_____	_____
2	Set Control Value	_____	_____
3	High Control Limit	_____	_____
4	Low Control Limit	_____	_____
5	Proportional Band	_____	_____
6	Integral Time	_____	_____
7	Derivative Time	_____	_____
8	PEIC Time	_____	_____
9	Setpoint Source	_____	_____
10	Setpoint Unit	_____	_____
11	Setpoint Delay	_____	_____
12	Percent of Ingredient	_____	_____
13	Process Variable Damping	_____	_____
14	PID+S Function	☐ Yes ☐ No	☐ Yes ☐ No
	SYSTEM SCROLL	**Scale #1**	**Scale #2**
1	Max Rate Capacity	_____	_____
2	Min Rate Capacity	_____	_____
3	Autotuning	☐ Yes ☐ No	☐ Yes ☐ No
4	Start Refill Set	_____	_____
5	End Refill Set	_____	_____
6	Refill on Manual	☐ Yes ☐ No	☐ Yes ☐ No
7	End Refill Time	_____	_____
8	Refill Time-Out	_____	_____
9	Density Compensation	_____	_____
9A	Control Out Correct	_____	_____
9B	Control Out Value	_____	_____
10	Rate Interval	_____	_____
11	Weight Constant	_____	_____

3.11 Permanent Field Record

Scale _____				
Date				
Scale Capacity				
Calib. Constant				
R-Cal				
Static				
Calibration Mode				
Zero – As Found				
- As Left				
Span – As Found				
- As Left				
By				

Chapter 4
Maintenance

The maintenance information in this manual should meet your service needs. If problems occur requiring technical assistance, please call (763) 783-2500.

Thermo Scientific has a repair center located at our plant in Minneapolis, Minnesota. Contact our Repair Representative at (763) 783-2774 for assistance. To expedite your service request, please have your machine model and serial number available.

4.1 Frequent Checkpoints

The *Micro-Tech 3104 Loss-in-Weight Controller* is a solid-state device and requires very little maintenance. The front panel can be wiped clean with a damp cloth, and if necessary, a mild detergent (never use abrasive cleaners, especially on the display window).

As a preventative measure, check to ensure all wires, plugs, and integrated circuits are tight in their connectors. Also, keep the enclosure door tightly closed to prevent dirt infiltration.

More often than not, a quick visual inspection leads to the source of trouble. If a problem develops, check the following before proceeding to more specific troubleshooting procedures:

- Check Power
  1. Check the Line Voltage Selector Switches are set to the correct line voltage
  2. Check the fuse
  3. Check that the power switch in ON and that power is supplied to the unit.
- Check Connections
  1. Check that all terminations are secure.
  2. Check to ensure the Display Module and Keyboard connectors are firmly seated in their connectors.
  3. Check that all Jumpers are in their correct position.

4.2 Troubleshooting

This unit has built-in troubleshooting capabilities. A number of possible problems are automatically detected and screen messages are displayed. Also, refer to the *Diagnostics Test Scrolls* in **MAIN MENU 3**.

4.3 Alarm Messages

The ALARM message is assigned to the right hand soft key when an alarm is pending. The Alarm message and its LED flash at the same time.

The following screen is displayed when the right hand soft key is pressed.

```
ALARM        NEW
xxxxxxxxxxxxxxxxxxxxx
MM-DD-YYYY        HH:MM
RESET             NEXT
```

- **NEW** indicates an alarm that has not yet been acknowledged. When the operator presses **RESET** to clear the alarm, the alarm disappears only if the trigger for the alarm does not exist any longer. If the alarm is still pending, **ACK** is displayed instead of **NEW**.
- **NEXT** is used to scroll between the pending alarms.
- XXXXXXXXXXXXXXXXX represents one of the conditions listed in *Section.4.3.1.*

4.3.1 Alarms List

1 - Clock Fail

The system has detected a failure on the clock calendar circuit.

- Go to the **DIAGNOSTICS** screen and re-enter the date and time.
- Check the battery
- Replace the motherboard.

2/4 - Loadcell Fail S#

S# identifies the scale if more than one is defined. The system has detected an error on the loadcell signal.

- Check the loadcell connections.
- Check the loadcell(s).

5 - RAM Fail

The system has detected an error on the *RAM* (*Random Access Memory*) checksum during the internal periodic test. The *RAM* is used to store variables and set up data.

- Replace the motherboard.

6 - ROM Fail

The system has detected a failure on the *ROM* (*Read Only Memory*) *checksum* during the internal periodic test. The *ROM* is used to store the program.

- Replace the mother board

7/9 - High Weight S#

S# identifies the scale if more than one scale is defined. Actual weight is higher than high weight threshold.

10/12 - Low Weight S#

S# identifies the scale if more than one scale is defined. Actual weight is lower than low weight threshold

13/15 - High Rate S#

S# identifies the scale if more than one scale is defined. Actual rate is higher than high rate threshold

16/18 - Low Rate S#

S# identifies the scale if more than one scale is defined. Actual rate is lower than low rate threshold

19 - Warm Start

The system has detected a power loss condition, or power was removed for an undefined period.

20 - Cold Start

- The system has detected the loss of the set up data after power was removed. The instrument needs to be setup and calibrated.
- Replace the motherboard

Note: **The message COLD START never appears on the screen. This is because a Cold Start forces a start up procedure to be executed, and the alarm itself is cleared after the se up is completed. However, the alarm LED and the digital output will be showing an alarm during the initial set up procedure.**

---

21 – Power Down During Calibration

When the system is powered off while a calibration sequence is in progress, the scale may not be properly calibrated.

- Check calibration

22/24 - Calib Time S#

S# identifies the scale if more than one scale is defined. If a calibration check time is entered and the time expires, this alarm occurs. The purpose is to remind the operator that the calibration has not been checked for a considerably long period.

- Check Calibration

25 - Ext. Alarm 1

Digital inputs can be programmed to detect external alarm conditions such as emergency switches, max level switches or other. This alarm is associated to the external alarm #1.

- Check External alarm #1.

26 - Ext. Alarm 2

- Check external alarm #2.

27 - Ext. Alarm 3

- Check external alarm #3

28/33 - HW Conf. Changed

When a new board is installed or an old board removed, this message displays.

34 – BCD Overflow

This message is only displayed if the optional BCD output board is installed. If the variable to be converted in the BCD format has more than 4 digits, the alarm is generated.

- Check the size of variable and the BCD data setup.

35 - Math Error

A divide by zero or overflow error is encountered during internal calculations. This message indicates some abnormal dimensional parameter is entered in setup.

- Check setup data

36 - Printer Error

This message is displayed if the system has data to print and the printer is disconnected or the paper feed is empty.

37 - Communication Error

Indicates a time out or handshake error is detected during a data transfer on the COMM line.

- Check the COMM line connections.
- Check the COMM line setup data.

38/40 - High Positive Deviation S#

S# identifies the scale if more scale are defined. Control error (*) is higher than High positive deviation set.

(*) Control error is defined as the difference between the process variable and the setpoint.

41/43 – High High Positive Deviation S#

S# identifies the scale if more scale are defined. Control error is higher than High high positive deviation set.

44/46 - High Negative Deviation S#

S# identifies the scale if more scale are defined. Control error is higher than High negative deviation set.

47/49 – High High Negative Deviation S#

S# identifies the scale if more scale are defined. Control error is higher than High high negative deviation set.

50 – Refill Timeout S#

S# identifies the scale if more scale are defined. Refill is taking a time higher than maximum refill time.

51/53 – Overflow Totalizer S#

S# identifies the scale if more scales are defined. This message indicates that the output pulse generator for the remote mechanical Totalizer has reached an overflow condition.

The rate may be too high or the remote pulse divider has been set too small

- Check the rate.
- Check and eventually increase the pulse driver.

This message is also displayed if the MASTER TOTAL rolls over.

59 – Allen-Bradley Remote I/O COMM Error

This message is displayed if communication is interrupted. The green LED on the A_B R I/O board will be flashing. The alarm does not come on if communication has never started.

60 – PROFIBUS-DP COMM Error

This messages in *only* displayed if the optional Profibus board is installed. The following two conditions activate the alarm.

The *Siemens SPC3 Controller* installed on the *Profibus* interface board does not recognize any successful data transfer within the watchdog timer interval.

The received data contains errors (value overlaps limits, register number does not exist, group number does not exist).

4.4 Micro-Tech 3104 Cold Start

It may be necessary to cold start the *Loss-in-Weight Controller* in the event memory becomes corrupted. In the event of a cold start, there are two options, installing the factory default constants or returning the Micro-Tech to its previous running state.

There are two methods of forcing a cold start through the front panel:

- In **RUN** mode
- From the **DIAGNOSITCS SCROLL**

4.4.1 Forcing a Cold Start from Run Mode

Use the following steps to force a cold start from **RUN** mode.

1. Press and hold at the same time the **LEFT HAND ARROW** and the **CLEAR** keys until the following screen displays.

```
Install Factory
Defaults?

NO              YES
```

No, Returns to Run Mode
Yes, the following screen displays:

```
-- MEMORY ERASED --
Choose the language
key to continue to
ESP             USA
```

2. When this screen displays, all field entry data has been replaced by the factory default constants. Precede to *Section 2.7*and follow the *Initial Setup* procedures.

Note: **If the software corruption was catastrophic and the memory *will not* erase do the following:**

Press and hold in the LEFT ARROW **and the** CLEAR **key. While holding in both keys, cycle line power. In the event the** MEMORY ERASED **screen does not appear, consult the factory.**

4.4.2 Forcing a Cold Start from the Diagnostic Scroll

Use the following steps to force a cold start from the **DIAGNOSITICS SCROLL**:

1. Press **MENU** until **MAIN MENU 3** appears
2. Press the **DIAG** soft key
3. Press the **DOWN ARROW** until the following screen is displayed:

```
-- DIAGNOST.SCROLL 15 --
Force cold start

ENTER
```

Press **ENTER**, the following screen displays:

```
ATTENTION
ARE YOU SURE?

YES              RETURN
```

RETURN returns to the **DIAGNOSTIC SCROLL 15**
YES, the following screen displays:

```
Install Factory
Defaults

YES              RETURN
```

RETURN returns to the **DIAGNOSTIC SCROLL 15**
YES, clears all field entry data, and installs the factory default constants. The following screen displays:

```
-- MEMORY ERASED --
Choose the language
 key to continue to
ESP              USA
```

4. Select a language and proceed to *Section 2.7*and follow the *Initial Setup* procedures.

4.5 Internal Test Procedure

Pressing **START** on the screen (located in **MAIN MENU 3**) initiates a self-test of the internal processor. The following screen displays:

```
    -- TEST SCROLL 2 --
Internal test of
 microprocessor.
START
```

Password: Service

Press **START**, the following screens display in sequence:

```
    -- TEST SCROLL 2A --
Testing ROM
Test PASSED
```

```
    -- TEST SCROLL 2B --
Testing RAM
Test PASSED
```

-- TEST SCROLL 2C --
Testing E2PROM
Test Passed

Displays *only* if *Audit Trail* is installed.

The message "Test PASSED" is displayed if the test runs correctly. If something wrong is detected, the message "Test FAILED" is displayed and the soft key **CONTINUE** is shown. Press **CONTINUE** and move to the next test.

If the internal test has failed, call Thermo Scientific Customer Service.

4.6 Loadcell Excitation and Signal Voltage

1. Measure excitation voltage across terminal 21 negative and 20 positive in the loadcell junction box. This should be 10 VDC ± 5%.
2. If the excitation voltage is incorrect then measure the excitation voltage in the *Loss-in-Weight Controller* across terminal TB4-33 negative and the TB4-32 positive. This should be 10 VDC ± 5%.
3. Measure DC millivolt signal voltage across terminal 22 positive and 23 negative in the scale junction box. This should be within 0-30 millivolts DC (3 mV/V loadcell).
4. Measure DC millivolt signal voltage across terminal TB4-30 positive and TB4-31 negative in the *Loss-in-Weight Controller*. This should be the same as Step 3 above.
5. The millivolt output is in direct relation to weight applied. As weight is increased, output should increase.

4.7 Resetting Master Total

Use the following steps to reset the *Master Total* or the *Remote Counter Overflow*.

4.7.1 No Password Installed

1. If there is no password installed, select **MAIN MENU 3**
2. Press **DIAG** soft key and scroll down to the **SERVICE PASSWORD** screen.
3. Type in a password (example: 123) and press **ENTER**
4. Re-enter the password and press **ENTER**
5. Select **MAIN MENU 3**
6. Select **PROT** scroll, press **PROT**
7. Press **NONE**
8. Enter the password 7832500 and press **ENTER**. The protection level should be RAMSEY.
9. Press **TOTAL;** scroll up or down if needed to reach the **MASTER TOTAL** screen.
10. Press **RESET** and select **YES** to "Reset Master Total?"

11. Select **MAIN MENU 3**. Press **DIAG** and scroll to **SERVICE PASSWORD**.
12. Press **ENTER** twice, erasing the password installed in Step 3.
13. Press **RUN** to return to normal operation.

4.7.2 Active Password

1. Select **MAIN MENU 3**
2. Select **PROT** scroll, press **PROT**
3. Press **NONE**
4. Enter the password 7832500 and press **ENTER**. The protection level should be RAMSEY.
5. Press **TOTAL;** scroll up or down if needed to reach the **MASTER TOTAL** screen.
6. Press **RESET** and select **YES** to "Reset Master Total?"
7. Select **MAIN MENU 3**
8. Press **PROT** and choose the password level desired.

4.8 Removing a Forgotten Password

Use the following steps to remove a forgotten password from *Integrator* memory.

1. Select **MAIN MENU 3**
2. Select the **PROTECT** scroll and press **PROT**
3. Press **NONE**
4. Enter the password 7832500 and press **ENTER**. The protection level should be RAMSEY.
5. Press **NONE**
6. Select **MAIN MENU 3**
7. Press **DIAG** and scroll to **SERVICE PASSWORD**
8. Press **ENTER** twice. The display should respond with **NEW PASSWORD ACQUIRED**.
9. Scroll down to **OPERATOR PASSWORD**. Press **ENTER** twice. The display should respond with **NEW PASSWORD ACQUIRED**.
10. Select **MAIN MENU 3**. The **PROT** soft key should not appear, indicating all passwords have been erased. If **PROT** does appear, repeat Steps 1 through 9.
11. See Section for entering new passwords.

4.9 Lithium Battery Replacement

The Micro-Tech volatile memory backup battery can be replaced without any special tools.

WARNING
DANGER OF EXPLOSION IF BATTERY IS INCORRECTLY REPLACED.

Replace only with same or equivalent type recommended by Thermo Scientific. Dispose of used battery according to manufacture instruction on battery or return to Thermo Scientific. (Refer to *Section 4.10.)*

1. Record *all* configuration, setup, and calibration data before removing battery. All information is lost when the battery is removed.
2. Turn the *Micro-Tech* power off at the mains.
3. Remove the battery from its compression socket.
4. Observe the polarity markings on the battery socket base before inserting the new battery. The lithium battery is 3V, 1.2 AH, 2/3 A, Thermo Scientific part number 037188.
5. Insert battery
6. Restore power to the *Micro-Tech.*
7. Cold start the *Micro-Tech*. See *Section 4.4* for cold start procedures.
8. Re-enter all data recorded in Step 1.

4.10 Disposal of Hazardous Waste

Disposal of Lithium batteries and soldered print circuit boards should be in accordance with your local Hazardous Waste Policy.

As an alternative, you may return product supplied by Thermo Scientific, freight prepaid for disposal. Contact Thermo Scientific Repair Department for a Return Authorization Number before shipping any product for disposal.

4.11 Cleaning Instructions

The *Micro-Tech 3104* is a solid-state device requiring very little maintenance. The front panel can be wiped clean with a damp cloth, and if necessary, a mild detergent (never use abrasive cleaners, especially on the display window). As a preventative measure, check all wires, plugs, and integrated circuits are tight in their connectors. Keep the enclosure door tightly closed to prevent dirt infiltration.

Chapter 5
Replacement Parts

This section gives information on how to order replaceable parts for your *Loss-in-Weight Controller* and includes drawings with corresponding parts lists to enable you to identify parts quickly and accurately.

5.1 Order Information

For faster service when ordering parts, fax or telephone Products Parts Department. Your regional field service representative will also be happy to assist you with parts orders, but his normal scheduling time may delay shipment of your parts order.

The recommended procedure for order parts is as follows:

1. Determine the broken or faulty part(s).
2. Locate the part(s) in the parts list given.
3. Find the part number(s) for the item(s) needed and determine the quantity you require.
4. Fax or telephone:

   Thermo Scientific
   Customer Service Department
   501 90th Ave. NW
   Minneapolis, MN 55433

   Customers A through M - (763) 783-2775
   Customers N through Z - (763) 783-2773
   Repair and Returns - (763) 783-2774
   Fax: - (763) 783-2525

Normal Customer Service hours are 8:00 a.m. to 4:30 p.m., Central time.

5. With your order, list the following information:

- Machine model and serial number
- Purchase order number
- Date required
- Method of shipment preferred
- List of parts, including part number, description and quantity

Your parts order will be handled as expeditiously as possible.

5.1.1 RMA Form

ThermoFisher SCIENTIFIC

501 90th Avenue N.W. Minneapolis MN 763-783-2500

Return Material Authorization
RMA No. : -

(This RMA Number Must Be Marked On All Paperwork And On Outside Of Package)

Req'd. By: _____
Date: _____
Customer Contact: _____
Phone: ( ) _____
Area Code

Return, Freight Prepaid To:
Thermo Fisher Scientific
501 90th Avenue N.W.
Minneapolis, MN 55433

Bill To Customer # : _____ Ship To # : _____

Returned From: _____

Return To: _____

Description Of Material Being Returned: _____

Describe Equipment Malfunction Or Defect, If Any; Symptoms: _____

Minimum Charge
☐ Informed Customer of ☐ Inspection Charge Per Item

Service Requested:
☐ Repair & Return ☐ Estimate Required P.O. No.: _____
☐ Return for Credit ☐ Original P.O. or Thermo Order No.: _____

☐ Warranty Repair or Replacement Serial No: _____
Original P.O. # _____ Original Order/Job # _____
☐ Return Warranty/Exchange Unit Shipped on Thermo Order No.: _____
☐ Other: _____

Disposition/Comments: (Thermo Fisher Scientific Internal Use Only)

REC-G-118 Rev. C

5.1.2 Parts List

Table 5-1: Parts List

EQUIPMENT	PART NUMBER
Chassis Assembly, Panel Mount	073285
Chassis Assembly, Field Mount	073279
PCBA, MOTHERBOARD	073283
PCBA, Display Assembly	073281
Touch Panel	073244
Bezel Assembly	073289
Fuse, Slo-Blo, 200mA (F1 230V) (Type T)	001366
Fuse, Slo-Blo, 400mA (F1 115V) (Type T)	002443
Prom, U54, MT-3000 Audit Trail	073300
Battery, Lithium, 3.0 V, 1.2 AH, 2/3 A.	037188
Program Disk	068137
Power Module	073280

Table 5-2: Optional *Plugin* Boards

EQUIPMENT	PART NUMBER
PCBA, Analog Output (1 out)	071637
PCBA Analog Output (2 in/2 out)	071636
PCBA, DIO (4 in/16 out)	046841
PCBA, DIO (16 in/4 out)	046844
PCBA, COMM "A" Select one only	068053
RS-232C	
RS-485, std. (point to point)	
RS-485, multi-drop	
20 mA (digital) current loop	
PCBA, Load Out DIO (4 in/16 out)	049475
PCBA, Load Out DIO (16 in/4 out)	049476
PCBA, Allen-Bradley RI/O	055517
PCBA, PROFIBUS-DP	056713
PCBA DeviceNet	068147
Field Marshall PCA	058842
DeviceNet PCBA	067097
Relay Output Board	073284

****

THIS PAGE LEFT BLANK INTENTIONALLY

****

Appendix A
Menus

The *Loss-in-Weight Controller* is a menu driven machine that allows the operator to access all setup, test, and calibration parameters. **MAIN MENU** screens **1** through **7** can be accessed at any time by pressing **MENU** until the desired screen is displayed.

Pressing the **SOFT KEY** directly below the desired scroll and then using the **UP/DOWN,** arrow scroll key selects the **MENU** scrolls.

If the *Loss-in-Weight Controller* is password protected, the appropriate password must be entered prior to making changes or performing routine calibration. Menus may be viewed without entering a password, but no entries are allowed unless the password is entered.

A.1. Menu Displays

Optional menu scrolls are only available if the option has been installed. Pressing menu activates the following screens:

```
    -- MAIN MENU 1 --
Press MENU for more
ZERO   SPAN
CAL    CAL    PRINT
```

```
    -- MAIN MENU 2 --
Press MENU for more
             SCALE   CALIB
DISPLAY  DATA      DATA
```

```
    -- MAIN MENU 3 --
Press MENU for more

PROT     DIAG     TEST
```

```
    -- MAIN MENU 4 --
Press MENU for more
I/O        ALAMS   LOAD
DEF        DEFIN.  OUT
```

```
-- MAIN MENU 5 --
Press MENU for more
COMM A   COMM B  PRINT
              *
```

* Can be AB RIO or PRO DP

```
-- MAIN MENU 6 --
Press MENU for more
AUDIT
TRAIL            LINEAR
```

```
-- MAIN MENU 7-
Press MENU for more

CONTROL       SYSTEM
```

A.2. Common Key Functions

The following functions are common from all scrolls at all times and the use of these keys is not repeated for each procedure:

- **Run** – pressing **RUN** return the *Loss-in-Weight Controller* to the **RUN** menu
- **Exit** – exit appears at the bottom of some screens as a soft key option. Pressing exit moves you back a menu.

A.3. MAIN Menu 1 – Calibration Menu

MAIN MENU 1 contains the **CALIBRATION MENU**. **MENU 1** is selected by pressing **MENU** until **MAIN MENU 1** displays. Desired **CALIBRATION** scrolls are selected by pressing the **SOFT** keys directly below the desired scroll. Calibration scrolls consist of the following:

- *Zero Calibration*
- *Span Calibration*

```
-- MAIN MENU 1 --
Press MENU for more
ZERO   SPAN   MAT'L
CAL    CAL    CAL
```

PRINT message is assigned to the right hand soft key only if more than one scale is defined.

A.3.1. Zero Calibration Scroll

The Zero Calibration is implemented as a machine directed procedure.

Auto Zero

If only one scale defined:

```
--     ZERO CAL      --
press START
START    SCALE #
MANUAL
```

Password: Operator

The scale must be kept empty during auto zero. A complete zeroing procedure requires 10 seconds.

Indication S# in the following scrolls will appear only if more than one scale is defined. # represents the active scale number

When **START** is pressed, the following screen is displayed:

```
S# AUTO ZEROING
Time remaining      0000
Gross            000.0   W.U.
END       ABORT
```

During *Auto Zero*, weight resolution is ten times higher than normal. The number of seconds in Line 2 corresponds to the time remaining for completing the test.
When zero is reached or END is pressed, the system displays the following screen:

```
S# AUTO ZERO COMPLETE
Error            ±000.00%
Change zero?
YES       NO
```

The word **COMPLETE** is flashing. The percentage of error is related to the scale capacity.

If **YES** is pressed, the next screen is shown:

```
S#  ZERO # CHANGED
Old zero         #00000
New zero         #00000
RUN       MENU
```

If **NO** is pressed, the next screen is shown:

```
S#  ZERO # UNCHANGED
Old zero        #00000
New zero        #00000
RUN       MENU
```

Note that in this case old zero and new zero are shown equal.

The zero constants are shown in A/D counts.

A.3.1.1 Manual Zero

The *Manual Zero* procedure allows the operator to directly enter the zero constant if known.

```
--     MANUAL ZERO     --
Gross           000.0 W.U.
Zero    #       00000
ENTER     SCALE #
```

Password: Operator

Default: 40000
Min: 0
Max: 120000

A.3.2. Span Calibration

The span calibration can be done in two different ways: R-Cal or Test Weights. The system allows the operator to select which one of the two methods to be used for normal calibration and calibration's check. The selection is made in **CAL DATA SCROLL 1**

A.3.2.1 Automatic Span Calibration With R-Cal

Use the following steps to begin an *R-Cal Calibration*:

1. Starting an R-Cal Calibration

```
     AUTO SPAN R CAL
Empty scale, then
press START
START    SCALE #   MANUAL
```

Password: Operator

When **START** is pressed, the Rcal relay energizes. A half second delay occurs after **START** for the weight to stabilize.

Note: The operator must insure that the scale is empty before pressing **START**.

2. Executing the Span Calibration

Indication S# in the following scrolls appears only if more than one scale is defined. # represent the active scale number.

Whichever method has been used to start automatic span calibration, after **START** is pressed, the following screen is displayed:

Entry point when **REPEAT** is pressed.

```
S# AUTOSPANNING
Time remaining      0000
Gross            000.0  W.U.
END       ABORT
```

During Auto Span, the weight resolution is 10 times higher than normal. The entire function takes 60 seconds to be completed; remaining time is displayed in line 2. The END key can be used to conclude the function in less time.

3. Recording the New Span

The system calculates the new span.

```
S# AUTOSPAN COMPLETE
Error            ±000.00%
Change span?
YES       NO     FACTOR
```

The word COMPLETE is flashing.

FACTOR key is displayed only if an auto span with test weight has been previously executed.

If **YES** is pressed, the following screen is displayed:

```
S#    SPAN # CHANGED
Old span  #      000000
New span   #    000000
RUN       REPEAT
```

REPEAT moves back to (2) above, and calibration restarts.

```
S#   SPAN# UNCHANGED
Old span  #      000000
New span         000000
RUN       REPEAT
```

Note: **the Old span and the New span are shown equally. This is because no change to the span has been done.**

If **FACTOR** is pressed, the R-Cal factor is computed. The following screen is displayed:

```
S#    FACTOR ACQUIRING
New fact         0000000 %
Change factor ?
YES       NO
```

NO moves back to (3) above.

YES acquires the new factor. If pressed, the following screen is displayed:

```
S#  FACTOR CHANGED
Old fact  #       000000 %
New fact         000000 %
RUN       REPEAT
```

4. Ending an Auto Span Procedure with R-CAL

Press RUN, the R-Cal relay is de-energized and the display is locked for 3 seconds.

A.3.2.2 Automatic Span Calibration With Test Weights

1. Starting Span Calibration With Test Weights

```
     AUTOSPAN Weights
Apply Weights, then
press START
START    SCALE #   MANUAL
```

Password: Operator

The operator must apply the test weights on the scale before pressing start.

When **START** is pressed, the span function begins.

2. Executing the Span Calibration

Indication S# in the following scrolls appear only if more than one scale is defined. # represents the active scale number

After START is pressed, the following screen is displayed:

Entry point when **REPEAT** is pressed (see below)

```
S# AUTOSPANNING
Time remaining      0000
Gross            000.0  W.U.
END       ABORT
```

During Auto Span, the weight resolution is 10 times higher than normal. The entire function takes 10 seconds to be completed; remaining time is displayed in line 2. The END key can be used to conclude the function in less time.

3. Recording the New Span

The system calculates the new span based on the result of the test performed with the selected method:

```
S# AUTOSPAN COMPLETE
Error            ±000.00%
Change span?
YES       NO
```

The word COMPLETE is flashing.

If YES is pressed, the following screen is displayed:

```
S#   SPAN # CHANGED
Old span  #     000000
New span   #    000000
RUN      REPEAT   FACTOR
```

FACTOR key is displayed only if an auto span with R-Cal has been previously executed.

REPEAT moves back (2) above, and calibration restarts.

If **NO** is pressed, the following screen is displayed:

```
S#   SPAN# UNCHANGED
Old span  #     000000
New span        000000
RUN      REPEAT
```

Note: The Old span and the New span are shown equally because there has been no change to the Old span.

If **FACTOR** is pressed, the RCAL factor is computed. The following screen is displayed:

```
S#   FACTOR ACQUIRING
New fact        0000000 %
Change factor ?
YES      NO
```

NO moves back to (3) above.

YES acquires new factor. If pressed, the following screen is displayed:

```
S#  FACTOR CHANGED
Old fact  #       000000 %
New fact        000000 %
RUN      REPEAT
```

A.3.2.3 Manual Span

If the span constant is known, the manual span procedure allows the operator to manually change span.

NOTE: If the span is manually entered, the RCAL factor is set to INVALID.

```
--     MANUAL SPAN     --
Gross            000.0 W.U.
Span   #       000000
ENTER     SCALE #   EXIT
```

Password: Operator

Default: 1166667
Min: 5000000
Max: 45000000

The RUN key returns you to Run Menu.

A.4. Main Menu 2 – Setup and Configuration Menus

MAIN MENU 2 contains the **SETUP AND CONFIGURATION MENUS**. **MENU 2** is selected by pressing **MENU** until **MAIN MENU 2** displays. Desired **SETUP AND CONFIGURAITON** scrolls are selected by pressing the **SOFT** keys directly below the desired scroll. Scrolls for **MAIN MENU 2** consist of the following:

- *Display*
- *Scale Data*
- *Calibration Data*

A.4.1. Display

The Display scroll sets up the parameters for how the information at the *Loss-in-Weight Controller* interface will display.

A.4.1.1 Measure Units

Measure units can be individually selected. The operator must first decide if The English or Metric units will be used, or a combination of both (Mixed).

Press **ENTER** soft key to accept the default unit, or **CHOICES** soft key to scroll selections. Press **ENTER** to confirm your selection. Scroll down.

```
-- DISPLAY SCROLL 1   --
Measure units
>ENGLISH<
CHOICE       ENTER
```

Password: Service

Default: ENGLISH In other language Default: METRIC
Choices: ENGLISH, METRIC, MIXED
English - all units in English
Metric - all units in Metric
Mixed – units may be a combination of English and Metric.

The rate is displayed according to the units selected here.

Press **ENTER** soft key to accept the default unit, or **CHOICES** soft key to scroll selections. Press **ENTER** to confirm your selection. Scroll down.

```
-- DISPLAY SCROLL 2   --
Rate units
>Lb/h<
CHOICE       ENTER
```

Password: Service

Default: English = LB/H
Choices: TPH, LTPH, LB/H, T/M, LT/M, LB/M

Default: Metric = KG/H
Choices: T/H, KG/H, T/M, KG/M

Default: Mixed = POUNDS
Choices: T/H, KG/H, T/M, KG/M, TP/H, LTPH, LB/H, T/M, LT/M, LB/M

The weights are displayed according to the units selected here.

Press **ENTER** soft key to accept the default unit, or **CHOICES** soft key to scroll selections. Press **ENTER** to confirm your selection. Scroll down.

```
-- DISPLAY SCROLL 3  --
Wegth units
>Pounds<
CHOICE        ENTER
```

Password: Service

Default: English = POUNDS
Choices: PERC%, POUNDS, TONS, LTONS

Default: Metric = KG
Choices: PERC%, KG, TONNES

Default: Mixed = POUNDS
Choices: PERC%, KG, TONNES, POUNDS, TONS, LTONS

Press **ENTER** soft key to accept the default unit, or **CHOICES** soft key to scroll selections. Press **ENTER** to confirm your selection. Scroll down.

```
-- DISPLAY SCROLL 4  --
Total units
>tons<
CHOICE        ENTER
```

Password: Service

Default: English = TONS
Choices: PERC%, TONS, LTONS, POUNDS

Default: Metric = TONNES
Choices: TONNES, KG

Default: Mixed = TONS
Choices: TONS, LTONS, POUNDS, TONNES, KG

Press **ENTER** soft key to accept the default unit, or **CHOICES** soft key to scroll selections. Press **ENTER** to confirm your selection. Scroll down.

A.4.1.2 Language

The Mod.3104 is a dual language instrument. English (ENG or USA) is always the first language; the second can be one from the following list.

Press **DOWN SCROLL** key.

```
-- DISPLAY SCROLL 6 --
Language
>USA<
CHOICE      ENTER
```

Password: Service

Default: USA
Choices: USA, ENG, ESP, FRA, GER, DUT, ITA

A.4.1.3 Time and Data Mode

The operator defines the format for displaying and printing time and date.

```
-- DISPLAY SCROLL 7 --
Time
>am/pm h<
CHOICE      ENTER
```

Password: Service

If USA or English: Default: am/pm
If other language: Default: 24 h
Selection: am/pm, 24 h

```
-- DISPLAY SCROLL 8 --
Date
>MM-DD-YYYY<
CHOICE      ENTER
```

Password: Service

If USA: Default: MM-DD-YYYY
If other language: Default: DD-MM-YYYY
Selection: DD-MM-YYYY, MM-DD-YYYY, YYYY-MM-DD

A.4.1.4 Line 2 and 3 of the RUN Menu

The RUN MENU can be configured to display on line 2 and/or 3 either weight, master total, reset total, date and time and graphic indication of the net weight.

```
-- DISPLAY SCROLL 8 --
Run display line 2
>Weight<
CHOICE  ENTER  SCALE#
```

Password: Operator

Default: WEIGHT
Choices: NO DISPLAY, WEIGHT, RESET TOT, MASTER TOT,

DATE/TIME, BARGRAPH

```
-- DISPLAY SCROLL 9  --
Run display line 3
>No Display<
CHOICE  ENTER  SCALE#
```

Password: Operator

Default: NO DISPLAY
Choices: NO DISPLAY, WEIGHT, RESET TOT, MASTER TOT, DATE/TIME, BARGRAPH

A.4.1.5 Division for Rate Display

Define the division used to display the rate value.

```
-- DISPLAY SCROLL 10  -
-Display rate
divis.  > 0.1 <
CHOICE  ENTER  SCALE#
```

Password: Operator

Default: 0.1
Choices: 0.1, 0.2, 0.5, 1, 2, 5, 10, 20, 50, 0.01, 0.02, 0.05, 0.001, 0.002, 0.005

A.4.1.6 Damping Factors for the Display

The process variable when displayed on the screen can be damped by a programmable factor, to filter out variations that can be introduced by mechanical vibrations. To tune a damping filter, enter the number of seconds corresponding to the desired time constant. If, for example, 10 seconds is entered, the process variable reaches the stability after a step change in 10 seconds.

```
-- DISPLAY SCROLL 11  -
-Display rate
Damping  10 sec
ENTER          SCALE#
```

Password: Operator

Default: 10sec
Min: 0sec
Max: 400sec

```
-- DISPLAY SCROLL 12  -
-Display weight
Damping  4 sec
ENTER          SCALE#
```

Password: Operator

Default: 4sec
Min: 0sec
Max: 400sec

A.4.1.7 Enable ALTERNATE Function on RUN Scroll

When two scales are enabled, the operator can display one scale or another by means of the SCALE# key.

The ALTERNATE function allows the operator to automatically change scales without pressing the SCALE # key at predefined interval of time.

A number of seconds greater than zero enables the function. If only scale is enabled, this scroll is not displayed.

```
-- DISPLAY SCROLL 13  -
-Alternate scale in
RUN      ____sec
ENTER
```

Password: Operator

Default: 0 sec (Function disabled)
Min: 0 sec
Max: 60 sec

A.4.2. Scale Data Scroll

Scale data defines the specific parameters of the scale.

A.4.2.1 Number of Scales

The *Loss-in-Weight Controller* can control two independent scales. The number of scales that can be programmed depends on the number A/D input installed.

```
-- SC DATA SCROLL 1  --
Number of scales
        1
ENTER
```

Password: Service

Default: 1
Min: 1
Max: 2

A.4.2.2 Scale Capacity and Divisions

The next entry is the scale capacity, which is the maximum capacity of the scale. This entry also defines the default number of decimal places that are used for display weight values. Use numeric keys for entering the number, confirm **ENTER**. Scroll down.

```
-- SC DATA SCROLL 2 --
Max. scale capacity
100.0 lbs
ENTER          SCALE #
```

Password: Service

Default: 100.0
Min: 1
Max: 200000

When the scale capacity is entered, the number of decimal places is also defined. If, for example, the operator enters 500.0, this sets the "Scale Division" parameter to 0.1. Advancing to the next scroll, the operator sees the Scale Division corresponding to the just entered Scale Capacity 8in the example 0.1). If required, the operator is able to alter the Scale Division to any of the available options.

Press the **ENTER** soft key to accept the default division, or the **CHOICES** Soft key to scroll selections. Press **ENTER** to confirm your selection. Scroll down.

```
-- SC DATA SCROLL 3 --
Scale divisions
>0.1<
CHOICE  ENTER  SCALE #
```

Password: Service

Default: 0.1
Choices: 0.1, 0.2, 0.5, 1, 2, 5, 10, 20, 50, 0.01, 0.02, 0.05, 0.001, 0.002, 0.005

A.4.2.3 Number of Loadcells of Your Scale

Enter the number of loadcells of your scale.

```
-- SC DATA SCROLL 4 --
# of load cell
  1
ENTER          SCALE #
```

Password: Service

Default: 1
Min: 1
Max: 6

A.4.2.4 Defining the Loadcell(s)

Enter the loadcell capacity as it appears on the label placed on the loadcell.

```
-- SC DATA SCROLL 5 --
Load cell capacity
250 Lbs
ENTER          SCALE #
```

Password: Service

English/Mixed		**Metric**	
Default:	250.0 Lbs	**Default:**	100 kg
Min:	10 Lbs	**Min:**	1 kg
Max:	15000 Lbs	**Max:**	15000 kg

Enter the loadcell sensitivity in mV/V as marked on the label of the loadcell. *Thermo* loadcells are normally 2.000 or 3.000 mV/V.

```
-- SC DATA SCROLL 6 --
Load cell sens.
3.00 mV/V
ENTER          SCALE #
```

Password: Service

Default: 3.0 mV/V
Min: 0.500 mV/V
Max: 3.500 mV/V

The resistance of the bridge of each loadcell has to be entered here. The number of scroll depends on the number of loadcells specified per each scale.

```
-- SC DATA SCROLL 7A --
Load cell # 1
350.0 Ohms
ENTER          SCALE #
```

Password: Service

Default: 350 Ohms
Min: 10 Ohms
Max: 1000 Ohms

If # of Loadcells is 2 or more:

```
-- SC DATA SCROLL 7B --
Load cell # 2
350.0 Ohms
ENTER          SCALE #
```

Password: Service

Same default and limits of loadcell #1

If # of Loadcells is 3 or more:

```
-- SC DATA SCROLL 7C--
Load cell # 3
350.0 Ohms
ENTER          SCALE #
```

Password: Service

Same default and limits of loadcell #1

If # of Loadcells is 4 or more:

```
-- SC DATA SCROLL 7D--
Load cell # 4
350.0 Ohms
ENTER          SCALE #
```

Password: Service

Same default and limits of loadcell #1

If # of Loadcells is 5 or more:

```
-- SC DATA SCROLL 7E--
Load cell # 5
350.0 Ohms
ENTER          SCALE #
```

Password: Service

Same default and limits of loadcell #1

If # of Loadcells is 6:

```
-- SC DATA SCROLL 7F--
Load cell # 6
350.0 Ohms
ENTER          SCALE #
```

Password: Service

Same default and limits of loadcell #1

Enter the lever ratio of the scale

```
-- SC DATA SCROLL 8A --
Lever ratio
1.000
ENTER   ENTER  SCALE #
```

Password: Service

Default: 1
Min: 0.1
Max: 5

A.4.3. Calibration Data Scroll

The CAL DATA Scroll allows the operator to set parameters which relate to the calibration of the scale.

A.4.3.1 Calibration Mode

Select which simulated method of automatic calibration is normally used. The select method is the only one displayed in the calibration section MENU 1.

```
-- CAL DATA SCROLL 1 --
Calibration mode:
< R-CAL<
CHOICE          ENTER
```

Password: Operator

Default: R-CAL
Choice: R-CAL, WEIGHTS

DETAILING THE TEST WEIGHT PARAMETERS

This section only applies if TEST WEIGHTS mode was selected as the preferred method. Enter the weight of the test weights that are going to be used for the calibration.

```
-- CAL DATA SCROLL 2 --
Total test weight on
scale  0.000 Lbs
ENTER           SCALE #
```

Password: Service

English/Mixed		**Metric**	
Default:	000.0 Lbs	**Default:**	0.000 kg
Min:	0.000	**Min:**	0.000
Max:	5000.000	**Max:**	5000.000

DETAILING THE R-CAL PARAMETERS

This section only applies if R-CAL mode was selected as the preferred method. Enter the resistance in Ohms of the electronic resistance installed in the instrument. If no changes have been made after the Loss-in-Weight Controller has left *Thermo*, the default value applies.

```
-- CAL DATA SCROLL 3 --
R-Cal selected res
   165000 ohms
ENTER           SCALE #
```

Password: Service

Default: 165000 Ohms
Min: 10 Ohms
Max: 1000000 Ohms

The system calculates the CALCON (Calibration Constant) based on the mechanical and electrical parameters entered in the Scale

Data Scroll.

This menu is for reference only.

```
-- CAL DATA SCROLL 4 --
R-Cal constant
   _______ W.U.
                SCALE #
```

The R-Cal factor can be computed during the auto span function and used to correct the error between the two span methods.

```
-- CAL DATA SCROLL 5 --
R-Cal factor
    0  %
ENTER    +/-    SCALE #
```

Password: Service

Default: INVALID (0)
Min: -99.99 %
Max: +99.99 %

A.4.3.2 Calibration Interval

The system can be programmed to prompt the operator when a certain amount of time has passed since the last calibration. If you do not want to use this option, confirm the default 0 days interval, otherwise enter the number of days. The calibration date displayed in Scroll 7 is automatically updated whenever a calibration is performed. If a non-zero value is entered, an alarm appears after the time is elapsed. The alarm can only be cleared after a calibration check is executed.

```
-- CAL DATA SCROLL 6 --
Calibration interval
    0  Days
ENTER
```

Password: Operator

Default: 0 Days (function disabled)
Min: 0 Days
Max: 365 Days

This scroll displays the date of the last calibration and the expected date of the next one, based on the entry in the previous screen.

```
-- CAL DATA SCROLL 7 --
Calibration date
Last  MM-DD-YYYY
Nest  MM-DD-YYYY
```

A.5. Main Menu 3

MAIN MENU 3 is used for protecting and un-protecting the system using passwords, and to perform diagnostic and test functions. The diagnostic functions can only be operated after removing all password protection, and should only be used by experienced technical personnel. Most test functions are not password protected.

```
--    -MAIN MENU 3      -
Press MENU for more
PROT    DIAG   TEST
```

The **PROTECTION** menu only becomes visible after passwords have been defined (see the **DIAGNOSTICS** Menu).

A.5.1. Changing the Protection Level

The *Micro-Tech 3104* has three protection levels to which specific passwords are related.

Appendix Table A-1: Password Protection Levels

Protection	Password	Status
NONE	SERVICE	The system is completely unprotected; all data can be read or changed.
LIMITED	OPERATOR	Operator functions and data are unprotected. All setup and calibration data are protected except zero calibrate.
PROTECTED		The system is totally protected, process data can be read, no change allowed.

A **SERVICE** password is required to access the **NONE** level. An **OPERATOR** or a **SERVICE** password is required to access the **LIMITED** level.

Use the **NONE** key to access the **NONE** protection level. If the current level is not already **NONE**, the **SERVICE** password is required.

Use the **LTD** key to access the limited protection level. If the system is in level **NONE**, change is immediate. If it is in PROT

level, the **SERVICE** or **OPERATOR** password is required. Use the **PROT** key to access the protected level. No password is required.

```
- PROTECTION LEVEL -
> NONE <

NONE    LTD    PROT
```

Default: NONE
Selections: NONE, LIMITED, PROTECTED
Password: from NONE to LTD or PROT: not required
from LTD to PROT: not required
from LTD to NONE: SERVICE
from PROT to NONE: SERVICE
from PROT to LTD: OPERATOR or SERVICE

Pressing the soft key gives entry to desired level. Going from a low level to a higher level forces the password entry.

A.5.1.1 Online Procedure for Changing Protection Level

The protection level can be temporarily changed by entering a password "on the fly" during normal operation. When the operator tries to enter a variable or select a function, which is password protected, and the password is installed, the following screen is displayed.

```
- SYSTEM PROTECTED -
PLEASE ENTER
PASSWORD_______
        ENTER
```

The operator can enter either the OPERATOR or the SERVICE passwords. However, if the operator enters the OPERATOR password and the variable or function requires the SERVICE password instead, the access is denied and the following screen is displayed.

```
- SYSTEM PROTECTED -
PLEASE ENTER SERVICE
PASSWORD _______
        ENTER
```

If the operator fails to enter the correct password, the following screen displays.

```
- SYSTEM PROTECTED -
INVALID PASSWORD
ACCESS DENIED
        RETURN
```

Pressing **RETURN** returns the program to the previous function. If the operator enters the correct password, the previous screen appears and access is allowed.

When the protection level is changed using the on line procedure, the system automatically returns to protected status if no keyboard entries are made within 60 seconds.

A.5.2. Diagnostics

A.5.2.1 A/D Raw Data

Diagnostic Scroll 1 shows the raw data from the A/D converter of the *Loss-in-Weight Controller* (A/D gross) and the net value after the zero constant has been subtracted. The range of the A/D converter is from 0 to 262140 numbers.

```
-DIAGNOST. SCROLL 1-
A/D gross  00000
A/D net    0000
                    SCALE #
```

A.5.2.2 Readout Loadcell mV

The system displays the mV output of the loadcell. The reading must be positive and must increase when the load increases.

```
-DIAGNOST. SCROLL 2-
Weight on load cell
0.000 mV
 CALIB              SCALE #
```

Password: Service

If **CALIB** is pressed, the next two scrolls are displayed and can be used to fine-tune the readout of mV/V.

```
-DIAGNOST. SCROLL 2A
Loadcell output zero
15   A/D counts
ENTER              SCALE #
```

Password: Service

Default: 15
Min: 0
Max: 10000

```
-DIAGNOST. SCROLL 2B
Loadcell output span
3497
ENTER              SCALE #
```

Password: Service

Default: 3497
Min: 0
Max: 30000

A.5.2.3 Change Passwords

Change the password by entering a new one. The user can enter up to eight characters (numeric keys entries). The entered numbers are not echoed on the screen. Pressing just the **ENTER** key removes the password.

```
-DIAGNOST. SCROLL 3-
ENTER SERVICE
PASSWORD  ********
ENTER
```

Password: Service

Default: No password

After the password has been entered, the system asks for confirmation. This prevents losing access control due to a typing mistake while entering passwords.

```
-DIAGNOST. SCROLL 3-
REENTER SERVICE
PASSWORD  ********
ENTER
```

If the password entered the second time matches the first, the following message confirms the entry.

```
-DIAGNOST. SCROLL 4-
NEW PASSWORD
ACQUIRED
RETURN
```

If the two passwords do not match, the system does not accept the new password.

```
-DIAGNOST. SCROLL 4-
INVALID PASSWORD

RETURN
```

```
-DIAGNOST. SCROLL 4-
ENTER OPERATOR
PASSWORD  ********
MENU  ENTER
```

Password: Operator

Default: No password

The OPERATOR password is double checked similarly to the service one.

It is strongly suggested to write down the password and preserve a copy in a safe place. If the password is forgotten, refer to Section 4.8 to remove a forgotten password.

A.5.2.4 Display Software Version

The software version is displayed for reference only.

```
-DIAGNOST. SCROLL 5-
Main software
version:
46.XX.XX.XX
```

A.5.2.5 Setup Date and Time

The user can set the current date and time. A battery operated clock calendar then maintains time and date even if power is removed. Day, Month, and Year are entered in sequence.

SERVICE

```
-DIAGNOST. SCROLL 6-
Date:    DD-MM-YYYY
DAY: DD
ENTER
```

Password:

Default: 00-00-0000
Min: 01-01-0000
Max: 31-12-2096

Time is entered in a similar way. The AM/PM key is used when time is in the English mode. See **DISPLAY SCROLL 7 IN MAIN MENU 2**.

```
-DIAGNOST. SCROLL 7-
Time:    HH:MM
HOURS:  _______
ENTER   AM/PM
```

	24-hour	**am/pm**
Default:	00.00	01.00
Min:	00.00	01.00
Max:	23:59	12:59

A.5.2.6 Check Hardware Configuration

The system automatically recognizes when optional boards are installed. The following scrolls are used to show the configuration. Remember that when a board is acknowledged, the related information stays in memory even if the board is removed, until the operator deletes it by responding **YES** to the message shown at power on.

The following screen is displayed for each optional plug-in board installed in each slot.

```
-DIAGNOST. SCROLL 8-
Board type slot #1

BOARD TYPE
```

```
-DIAGNOST. SCROLL 9
Board type slot #2

BOARD TYPE
```

```
-DIAGNOST. SCROLL 10
Board type slot #3

BOARD TYPE
```

Appendix Table A-2: List of Optional Plugin Board Types

- Dig I/O 16in/4out	Optional digital input output board. - #16 Optocoupled digital Inputs - #4 Optocoupled digital outputs
- Dig I/O 16out/4in	Optional digital input output board. - #4 Optocoupled digital Inputs - #16 Optocoupled digital outputs
- Load Out 16in/4in	Optional digital input output board dedicated to the Load Out. - #16 Optocoupled digital inputs - #4 Optocoupled digital inputs
- Load Out 16out/4in	Optional digital input output board dedicated to the Load Out. - #4 Optocoupled digital inputs - #16 Optocoupled digital inputs
- Current Out	Optional current output board. - #1 Current output
- Communication A	Serial communication board (RS232, RS485)
- Communication B	Allen-Bradley Remote I/O PROFIBUS-DP

A.5.3. Tests

A.5.3.1 Lamp Test

Press **START** to begin a Lamp Test of the *Loss-in-Weight Controller*. All LED's and digits of the display blink for a number of seconds.

```
- TEST SCROLL 1   -
LAMP TEST

START
```

A.5.3.2 Self Test of the Unit

The system can perform some internal test functions, which can be used to detect malfunctions to the hardware devices.

Service

```
- TEST SCROLL 2   -
Internal test of
microprocessor
START
```

Password:

After **START** is pressed, the following screens are displayed in sequence.

```
 TEST SCROLL 2A  -
Testing  ROM
Test PASSED
```

```
 TEST SCROLL 2B  -
Testing  RAM
Test PASSED
```

Only with Audit Trail option

```
 TEST SCROLL 2C  -
Testing  E2Prom
Test PASSED
```

The message "Test PASSED" is displayed if the test runs correctly. If something wrong is detected, then the message "Test FAILED" is displayed, and the soft key **CONTINUE** is shown. The operator has to press the key to go on to the next test.

A.5.3.3 Test Digital Inputs

The next screen is used to check the digital input circuitry. The display shows a 1 if the specific input is closed, 0 if open. If more digital I/O boards are installed, the **NEXT** soft key appears, allowing the operator to scroll between boards. Slots are numbered 1-3; slot 0 is the motherboard.

```
- TEST SCROLL 3  -
Dig input test
Slot#0     ----00--
NEXT
```

‘Digit’ (displayed instead of ‘slot#’) identifies the four Digitizer’s inputs. Inputs are shown from left to right. If a board has 16 inputs, two screens are used to show the first and the second half, the lower half is shown first.

A.5.3.4 Test Digital Outputs

This test shows the status of each digital output and allows the operator to force the output for testing purposes. The output, when forced, stays on until the **CLEAR** soft key is pressed or the Run Menu is entered. If an output is forced and the scroll key is used for reaching some other menu, the output stays in the forced status until **RUN** is pressed. This allows the operator to check inputs while outputs are still in the forced status.

```
- TEST SCROLL 4   -
Dig output test
output # 1 :  ON/OFF
ENTER         ON/OFF
```

Password: Service

To force an output, enter the desired number followed by **ENTER**. Then use the **SET/RESET** key to force it to the **ON** or **OFF** status. After the output has been forced, the **CLEAR** soft key appears in the middle position.

Slots are numbered 1-3; slot 0 is the motherboard.

WARNING

FORCING THE DIGITAL OUTPUTS MAY CAUSE MACHINERY TO START. AFTER THE USER TRIES TO FOURCE AN OUTPUT, THE FOLLOWING MESSAGE DISPLAYS.

```
WARNING
EQUIPMENT MAY START

CONTINUE     ABORT
```

WARNING

IF THE USER PRESSES CONTINUE, BE AWARE THE ACTION MAY CAUSE DAMAGE OR INJURY. IF THE USER PRESSES ABORT, THE SYSTEM RETURNS TO THE PREVIOUS SCROLL.

A.5.3.5 Test Current Outputs

```
- TEST SCROLL 5 -
Current output #1
should be 00.0 mA
ENTER  CLEAR
```

Password: Service

Default: 0.0 mA
Min: 0.0 mA
Max: 20.0 mA

To force the output, enter the desired number of milliamps and press **ENTER**. Press **CLEAR** to free the mA channel.

Then, the following screen is shown (two or more current output are detected).

If a second current output is installed:

```
- TEST SCROLL 6 -
Current output #2
should be 00.0 mA
ENTER  CLEAR
```

Password: Service

Default: 0.0 mA
Min: 0.0 mA
Max: 20.0 mA

If a third current output is installed:

```
- TEST SCROLL 7 -
Current output #3
should be 00.0 mA
ENTER  CLEAR
```

Password: Service

Default:
Min:
Max: 20.0 mA

If the (max) fourth current output is installed:

```
- TEST SCROLL 8 -
Current output #4
should be 00.0 mA
ENTER  CLEAR
```

Password: Service

Default: 0.0 mA
Min: 0.0 mA
Max: 20.0 mA

A.5.3.6 Test Current Inputs

The following screen is displayed when an analog input board is detected, and shows the status of each analog input channel.

```
- TEST SCROLL 9  -
Current input
#1  00.0 V
#2  00.0 V
```

Password: Service

A.5.3.7 Test Communication A

The following screen allows checking the installed serial lines using a loop back type test. The maximum line number is 2; Transmit must be tied to receive for this test. "**Port 1**" is standard and "**Port 2**" is shown only if optional Comm boards are detected.

```
- TEST SCROLL 10  -
Test Communication A

Port 1          Port 2
```

Password: Service

By pressing the **PORT 1** or the **PORT 2** soft key, the test is initiated. A test pattern is sent out on the TX output and read on the RX input. If the test fails, the message "Test Failed" is shown; otherwise, the message "Test Passed" is displayed.

A.5.3.8 Test RS232

To test RS232 the test requires a hardware jumper to be installed between terminals TB3-22 (RX) and TB3-21 (TX).

A.5.3.9 Test RS485

To test the RS485 the test requires a hardware jumper to be installed between terminals TB3-21 and TB3-28 to TB3-20 and TB3-29.

A.5.3.10 Test Communication B

This test is similar to the previous one but works for the field bus version of the communication board.

```
- TEST SCROLL 11  -
Test communication B

START
```

Password: Service

A.5.3.11 Test BCD Output Board

If an optional 16 Out/4 In load out board is detected, the following screen appears.

```
- TEST SCROLL 12  -
BCD Output test
_____
ENTER           CLEAR
```

Password: Service

Default: 0
Min: 0

Max: 9999 or 7999 if parity check enable

The force the outputs, enter a number followed by **ENTER**. The **CLEAR** key appears indicating the output is being forced to a value. Pressing **CLEAR** frees the output.

A.5.3.12 Test BCD Input Board

The following test is displayed if a 16 In/4 Out load out board is detected.

```
- TEST SCROLL 13  -
BCD Input test
_________
```

The value read on the BCD input is displayed dynamically.

A.5.3.13 Simulated Control

```
- TEST SCROLL 14 -
Simulated control
NO
CHOICE   ENTER   SCALE #
```

Password: Service

Default: NO
Min: YES, NO

When enabled, the weight is internally simulated, ignoring the loadcell signal.

A.5.3.14 Test the Keyboard and Switches

```
- TEST SCROLL 16 -
Keyboard + switches
Key: ______
```

Press the **RUN** key twice to exit. All other keys, including **MENU**, are displayed but not executed.

A.6. Main Menu 4

The following section defines the input output (I/O), alarms and optionally of the load out batch.

```
-   MAIN MENU 4   -
Press MENU for more
I/O          ALARMS
DEFINE       DEFINE
```

A.6.1. I/O Definition

The input output section of the system is fully configurable. All inputs and outputs are conventionally numbered and can be assigned to physical input and output terminals depending on the needs. The following section explains how to configure I/O. However, the standard configuration as provided by the factory is normally satisfactory.

A.6.1.1 Define Current Outputs

The following menus are shown for configuring the current output(s). Use the **CHOICE** key to change the variable and the **ENTER** key to confirm. The **NEXT** key allows the operator to set up to four (4) current outputs if installed.

```
- I/O DEF SCROLL 1 -
Current Output define
#1 > Cntrl  <
CHOICES  ENTER  NEXT
```

Password: Service

Default: CONTROL, NONE, NONE, NONE
Selections: NONE, WEIGHT, RATE, CONTROL

Alternatively, if more than one scale is defined.

Selections: NONE, WEIGHT S1, WEIGHT S2, RATE S1, RATE S2, CONTROL S1, CONTROL S2.

If the selection of the previous screen is not **NONE**, the operator can set up the range, delay and damping of the current output. The range is selectable between the standard 0 to 20 mA and 4 to 20 mA both in direct and reverse mode. Select 0-20 or 4-20 if an increase in current is desired for any increase of the variable. Select 20-0 or 20-4 if a decrease of current is desired for any increase of the variable.

```
- I/O DEF SCROLL 1A-
Current out range
#1 > 4-20 mA <
CHOICES  ENTER  NEXT
```

Password: Service

Default: 4-20 mA,
Selections: 0-20 mA, 4-20 mA, 20-0 mA, 20-4 mA

Each current output can be delayed.

```
I/O DEF SCROLL 1B-
Current out delay
#1 0   sec
ENTER          NEXT
```

Password: Service

Default: 0 sec

Min: 0 sec
Max: 300 sec

A damping factor can also be selected for each current channel. The damping factor is the time for the output to stabilize after a step change. This damping only affects the current output, not the displayed variable, which has a separate damping factor, selectable in Main Menu 2, Display.

```
- I/O DEF SCROLL 1C-
Current out damping
#1   0
ENTER    NEXT
```

Password: Operator

Default: 0 sec,
Min: 0 sec
Max: 400 sec

UP and **DOWN** arrows move between range, delay, and damping. **NEXT** moves to the next current output.

A.6.1.2 Define Analog Inputs

Analog input board is installed and the following screens are displayed. Analog inputs can be used for measuring the moisture or as remote setpoint input.

```
- I/O DEF SCROLL 2 -
Analog Input #1 def.
> None <
CHOICES  ENTER CALIB
```

Password: Service

Default: NONE
Selections: NONE, SETPOINT, MOISTURE

If more than one scale is defined:
Selections: NONE, SETPOINT S1, SETPOINT S2, MOISTURE S1, MOISTURE S2

```
- I/O DEF SCROLL 3 -
Analog Input #2 def.
> None <
CHOICES  ENTER CALIB
```

Password: Service

Default: NONE
Selections: NONE, SETPOINT, MOISTURE

If more than one scale is defined:

Selections: NONE, SETPOINT S1, SETPOINT S2, MOISTURE S1, MOISTURE S2

Pressing the **CALIB** key displays the next scrolls.

A.6.1.3 Setup Moisture Compensation Input

If an analog input has been programmed for reading the moisture signal and **CALIB** was pressed, the following screens appear. The user can calibrate the input signal by entering the equivalence between percent of moisture and voltage on two points. Use the **%Moist** key to enter the percent of moisture, use the volt key to enter the corresponding number of volts, and confirm with **ENTER**.

Only if ANALOG INPUT (moisture) option is enable and CALB is pressed

```
- I/O DEF SCROLL 2A -
Moisture input calibr. #1
0.0 %M   =   2.0 V
ENTER   %Moist      Volt
```

Password: Service

Default: 0.0 % 0.0 V
Min: 0.0 % 0.0 V
Max: 20.0 % 2.5 V

Do the same with the second point shown below.

```
- I/O DEF SCROLL 2B -
Moisture input calibr. #2
5.0 %M   =   5.0 V
ENTER   %Moist      Volt
```

Password: Service

Default: 5.0 % 5.0 V
Min: 1.0 % 1.0 V
Max: 100.0 % 5.0 V

A.6.1.4 Setup Remote Setpoint

Only if ANALOG INPUT (remote setpoint) option is enabled and CALIB is pressed

```
- I/O DEF SCROLL 2C-
Rem setpoint cal  #1
0.0 %S = 0.0  V
ENTER    % SET      VOLTS
```

Password: Service

Default: 0.0% 0.0V
Min: 0.0% 0.0V
Max: 20.0% 2.5V

```
- I/O DEF SCROLL 2D-
Rem setpoint cal  #2
5.0 %S = 5.0  V
ENTER    % SET      VOLTS
```

Password: Service

Default: 100.0% 5.0V
Min: 0.0% 1.0V
Max: 100.0% 5.0V

A damping factor can also be selected for each analog input channel.

```
- I/O DEF SCROLL 4-
Analog input damping
#1 _______ sec
ENTER                NEXT
```

Password: Operator

Default: 0 sec
Min: 0 sec
Max: 400 sec

A.6.1.5 Define Digital Inputs

Digital inputs can be programmed. The following screen shows one logical function per time, and allows the user to assign it to a physical input. The **NEXT** key scrolls between the logical functions. The **NC/NO** key selects the Normally Open (NO) or Normally Closed (NC) status of the input. Normally Open means the input is inactive when disconnected. To program a function, scroll with **NEXT** until the function is displayed, then enter the physical input number and confirm with **ENTER**; finally scroll with **NC/NO** until the desired mode is displayed. By assigning a function to 0, the function is disabled.

```
- I/O DEF SCROLL 5 -
Dig. Input def.
Ext Alarm 1      ___   NC
ENTER    NC/NO      NEXT
```

Password: Service

The following table shows the available logical selections that can be assigned to any available physical input. Typical field wiring drawings and customer specific field wiring drawings show Reset alarms defaulted to # 1 NO, Refill defaulted to #2 NO and Running defaulted to #3 NC. Default inputs can be reassigned to any physical input if desired. External alarms 1, 2, and 3 can be assigned to logical functions not on the list.
Logical selections should not be reassigned after the physical inputs have been wired.

CAUTION

LOGICAL INPUTS RETURN TO THE DEFAULT IF THE *INSTRUMENT* IS COLD STARTED.

Appendix Table A-3: Available Logical Selections

Selections:	Default:	
External alarm 1	0 NO	0 = function disabled
External alarm 2	0 NO	
External alarm 3	0 NO	
Reset alarms	1 NO	
Print	0 NC	
Print S1	0 NO	
Print S2	0 NO	
Reset tot	0 NO	
Reset tot S1	0 NO	
Reset tot S2	0 NO	
Refill	2 NO	
Refill S1	0 NO	
Refill S2	0 NO	
Local/Remote Control	0 NO	
Local/Remote Control S1	0 NO	
Local/Remote Control S2	0 NO	
Auto/Man Control	0 NO	
Auto/Man Control S1	0 NO	
Auto/Man Control S2	0 NO	
Running	3 NC	
Running S1	0 NO	
Running S2	0 NO	

Appendix Table A-4: Mother Board Inputs

PHYSICAL INPUT NUMBER	ASSIGNED FUNCTION		
1	RESET ALARMS	TB1-2	TB1-3
2	REFILL	TB2-12	TB2-13
3	RUN	TB2-14	TB2-15
4		TB2-16	TB2-17
5		TB2-18	TB2-19

Additional assignable logical inputs from the above table can be selected by adding optional I/O boards. Available options are 4in/16out, 16in/4out, or 20in/20out by adding both boards.

Appendix Table A-5: Digital Input/Output Board Inputs

		INSTALLED OPTIONS		
PHYSICAL INPUT NUMBER	ASSIGNED FUNCTION	4IN/16OUT ONLY	16IN/4OUT ONLY	4IN/16OUT AND 16IN/4OUT
6		J15 - 2	J16 - 17	J15 - 2
7		J15 - 15	J16 - 5	J15 - 15
8		J15 - 3	J16 - 18	J15 - 3
9		J15 - 16	J16 - 6	J15 - 16
10			J16 - 19	J16 - 17
11			J16 - 7	J16 - 5
12			J16 - 20	J16 - 18
13			J16 - 8	J16 - 6
14			J16 - 21	J16 - 19
15			J16 - 9	J16 - 7
16			J16 - 22	J16 - 20
17			J16 - 10	J16 - 8
18			J16 - 23	J16 - 21
19			J16 - 11	J16 - 9
20			J16 - 24	J16 - 22
21			J16 - 12	J16 - 10
22				J16 - 23
23				J16 - 11
24				J16 - 24
25				J16 - 12

WARNING

CHANGING THE DEFINITION OF THE DIGITAL INPUTS MAY CAUSE MACHINERY TO START. AFTER THE USER TRIES TO CHANGE A DEFINITION, THE FOLLOWING MESSAGE IS DISPLAYED.

```
WARNING
EQUIPMENT MAY START
CONTINUE        ABORT
```

IF THE USER PRESSES CONTINUE, BE AWARE THE ACTION MAY CAUSE DAMAGE OR INJURY. IF THE USER PRESSES ABORT, THE SYSTEM WILL RETURN TO THE PREVIOUS SCROLL.

A.6.1.6 Define Digital Outputs

Digital outputs can be programmed. The following screen shows one logical function per time, and allows the user to assign it to a physical output. The **NEXT** key scrolls between the logical functions. The **NC/NO** key selects the Normally Open (NO) or Normally Closed (NC) status of the output. Normally Open means the output is not energized. To program a function, scroll with **NEXT** until the function is displayed, then enter the number of the physical output and confirm with **ENTER**; finally scroll with **NC/NO** until the desired mode is displayed. By assigning a function to 0, the function is disabled.

```
- I/O DEF SCROLL  6 -
Dig. Output def.
Alarm:  0   NC
ENTER   NC/NO  NEXT
```

Password: Service

The following table shows the available logical selections that can be assigned to any available physical output. Typical field wiring drawings and customer specific field wiring drawings show Ready defaulted to #1 NC, Alarm defaulted to #2 NC and Refill defaulted to #3 NO. Default selections can be reassigned to any physical output if desired.

Logical selections should not be reassigned after the physical outputs have been wired.

CAUTION

LOGICAL SELECTIONS RETURN TO THE DEFAULT IF THE *INSTRUMENT* IS COLD STARTED.

Digital output name S1 or S2 is only displayed if more scales are defined.

Appendix Table A-6: Available Logical Assignment

Selections	Default	
Alarm	2 NC	
Shut down	0 NC	
Ready	1 NO	
Refill	3 NO	(Only if one scale is defined)
Refill S1	0 NO	
Refill S2	0 NO	
High weight	0 NO	(Only if high weight Alarm enabled)
High weight S1	0 NO	(Only if high weight Alarm enabled)
High weight S2	0 NO	(Only if high weight Alarm enabled)
Low weight	0 NO	(Only if low weight Alarm enabled)
Low weight S1	0 NO	(Only if low weight Alarm enabled)
Low weight S2	0 NO	(Only if low weight Alarm enabled)
High rate	0 NO	(Only if high rate Alarm enabled)
High rate S1	0 NO	(Only if high rate Alarm enabled)
High rate S2	0 NO	(Only if high rate Alarm enabled)
Low rate	0 NO	(Only if low rate Alarm enabled)
Low rate S1	0 NO	(Only if low rate Alarm enabled)
Low rate S2	0 NO	(Only if low rate Alarm enabled)
H Dev Pos	0 NO	(Only if High Pos. Dev. Alarm enabled)
H Dev Pos S1	0 NO	(Only if High Pos. Dev. Alarm enabled)
H Dev Pos S2	0 NO	(Only if High Pos. Dev. Alarm enabled)
H Dev Neg	0 NO	(Only if High Neg. Dev. Alarm enabled)
H Dev Neg S1	0 NO	(Only if High Neg. Dev. Alarm enabled)
H Dev Neg S2	0 NO	(Only if High Neg. Dev. Alarm enabled)
HH Dev Neg	0 NO	(Only if HHigh Neg. Dev. Alarm enabled)
HH Dev Neg S1	0 NO	(Only if HHigh Neg. Dev. Alarm enabled)
HH Dev Neg S2	0 NO	(Only if HHigh Neg. Dev. Alarm enabled)
Loc/Rem	0 NO	

Loc/Rem S1	0 NO	
Loc/Rem S2	0 NO	
Auto/Man	0 NO	
Auto/Man S1	0 NO	
Auto/Man S2	0 NO	
Increase	0 NO	
Increase S1	0 NO	
Increase S2	0 NO	
Decrease	0 NO	
Decrease S1	0 NO	
Decrease S2	0 NO	
Totalizer	0 NO	(Only if one scale is defined)
Totalizer S1	0 NO	
Totalizer S2	0 NO	

There are 5 outputs, 4 assignable, and 1 non-assignable Fault output standard on the motherboard.

Appendix Table A-7: Relay Board and Motherboard Outputs

PHYSICAL OUTPUT NUMBER	RELAY ASSIGNED FUNCTION	RELAY BOARD		
		NC	COM	NO
FAULT	FAULT	1	2	3
1		4	5	6
2			7	8
3			9	10

PHYSICAL OUTPUT NUMBER	SOLID STATE ASSIGNED FUNCTION	Mother Board Terminals	
4	————————	TB1-5	Power
		TB1-6	Signal
		TB1-7	COM

Additional assignable logical selections from the above table can be selected by adding optional I/O boards. Available options are 4in/16out, 16in/4out, or 20in/20out by adding both boards.

Appendix Table A-8: Digital Input/Output Board Outputs

		INSTALLED OPTIONS		
PHYSICAL OUTPUT NUMBER	**ASSIGNED FUNCTION**	**4IN/16OUT ONLY**	**16IN/4OUT ONLY**	**4IN/16OUT AND 16IN/4OUT**
5		J15-17	J16 - 2	J16 - 2
6		J15 - 5	J16 - 15	J16 - 15
7		J15 - 18	J16 - 3	J16 - 3
8		J15 - 6	J16 - 16	J16 - 16
9		J15 - 19		J15 - 17
10		J15 - 7		J15 - 5
11		J15 - 20		J15 - 18
12		J15 - 8		J15 - 6
13		J15 - 21		J15 – 19
14		J15 - 9		J15 – 7
15		J15 - 22		J15 – 20
16		J15 - 10		J15 – 8
17		J15 - 23		J15 – 21
18		J15 - 11		J15 – 9
19		J15 - 24		J15 – 22
20		J15 - 12		J15 – 10
21				J15 – 23
22				J15 – 11
23				J15 – 24
24				J15 – 12

WARNING

CHANGING THE DEFINITION OF THE DIGITAL OUTPUTS MAY CAUSE MACHINERY TO START AFTER THE USER TRIES TO CHANGE A DEFINITION. THE FOLLOWING MESSAGE IS DISPLAYED.

WARNING
EQUIPMENT MAY START
CONTINUE ABORT

IF THE USER PRESSES CONTINUE, BE AWARE THE ACTION MAY CAUSE DAMAGE OR INJURY. IF THE USER PRESSES ABORT, THE SYSTEM RETURNS TO THE PREVIOUS SCROLL.

A.6.1.7 Define BCD Output Data

If an optional load out board is installed, the user can select the related variable.

```
- I/O DEF SCROLL 7 -
BCD Output variable
> Weight <
CHOICES  ENTER
```

Password: Service

Default: NONE
Selections: NONE, WEIGHT, RATE

Or, if two scales enabled:

Selections: NONE, WEIGHT S1, RATE S1, WEIGHT S2, RATE S2

If a selection other than **NONE** is made, the following screens allow the user to define the polarity and the parity check of the BCD output. The polarity selection reverses the signals from NO to NC and vice versa. If a parity criterion is selected, the most significant bit of the BCD output is used for parity check.

```
- I/O DEF SCROLL 7A-
BCD Output polarity
> Positive <
CHOICES  ENTER
```

Password: Service

Default: NEGATIVE
Selections: POSITIVE, NEGATIVE

```
- I/O DEF SCROLL 7B-
BCD Output parity
> Yes <
CHOICES  ENTER
```

Password: Service

Default: NO
Selections: NO, YES

A.6.1.8 Define Remote Totalizer Output

If a digital output has been assigned to TOTALIZER function, the following two scrolls are displayed.

Set the divider according to the maximum rate the scale will run. The divider is entered in totalization unit (T.U.). The pulse frequency generated in normal conditions cannot exceed 50 Hz.

```
I/O DEF SCROLL 9 -
Remove counter div.
      0.1  T.U.
ENTER
```

Password: Service

Default: 0.1
Min: 0.01
Max: 100

Enter the pulse width in seconds for the totalizer. A higher pulse width limits the maximum frequency. The default 0.1 sec is recommended for frequencies lower then 5 Hz.

```
- I/O DEF SCROLL 10-
Remote counter pulse
Width     0.1  sec
ENTER
```

Password: Service

Default: 0.1 sec
Min: 0.01 sec
Max: 1.00 sec

A.6.2. Alarms Definition

The alarms of the Micro-Tech 3104 can be programmed. Process alarms such as low and high rate can be set to the desired range. In addition, all alarms can be defined to be:

- **ALARM-**When an alarm occurs, the front panel ALARM status indicator illuminates. An ALARM message flashes in the lower, right hand RUN display. Pressing ALARM displays the alarm.
- Pressing RESET clears the alarm message if the alarm parameter has cleared. If the alarm parameter has not cleared, the message "ACK" appears when RESET is pressed. When the alarm parameter clears, the alarm indication clears.

  Pressing RUN at any time returns the operator to the RUN menu.

  Alarms can be automatically printed if the print option is enabled.

- **SHUT DOWN** The alarm handler operates as above except the READY status indicator goes off and the SHUTDOWN physical output changes state at the same time as the ALARM status indicator comes on.

  In the I/O definition scroll, alarm and ready can be assigned to N/C or N/O physical outputs. The output activates and deactivates at the same time as the front panel status indicators.
- **NONE** Alarm is deactivated.

A.6.2.1 Define High Weight Alarm

Use the **CHOICE** key to turn on or off the threshold #1 alarm. Confirm with **ENTER**.

```
- ALARM  SCROLL 1 -
High weight alarm
> NO <
CHOICE  ENTER   SCALE #
```

Password: Operator

Default: NO
Selections: YES, NO

If the selection in the previous screen was YES, enter the threshold set points for the alarm.

The **UNITS** key allows the operator to specify the set points in engineering units. The **% key** selects set points in percent referring to scale capacity

```
- ALARM  SCROLL 1A -
High weight,
set  90  %
ENTER   UNITS   SCALE #
```

Password: Operator

Default: 90%
Min: 0 %
Max: 105 %

Enter the desired delay time before the alarm is monitored.

```
- ALARM  SCROLL 1B -
High weight,
delay  2  sec
ENTER              SCALE #
```

Password: Operator

Default: 2 sec
Min: 0 sec
Max: 90 sec

A.6.2.2 Define Low Weight Alarm

Use the **CHOICE** key to turn on or off the low weight alarm. Confirm with **ENTER.**

```
- ALARM  SCROLL 2  -
Low weight alarm
> NO <
CHOICE  ENTER   SCALE #
```

Password: Operator

Default: NO
Selections: YES, NO

If the selection in the previous screen was YES, enter the threshold set points for the alarm.

The **UNITS** key allows the operator to specify the set points in engineering units. The **% key** selects set points in percent referring to scale capacity

```
- ALARM  SCROLL 2A -
Low weight,
set  10  %
ENTER   UNITS   SCALE #
```

Password: Operator

Default: 10%
Min: 0 %
Max: 105 %

Enter the desired delay time before the alarm is monitored.

```
- ALARM  SCROLL 2B -
Low weight,
delay  2  sec
ENTER              SCALE #
```

Password: Operator

Default: 2 sec
Min: 0 sec
Max: 90 sec

A.6.2.3 Define High Rate Alarm

Use the **CHOICE** key to turn on or off the high rate alarm. Confirm with **ENTER.**

```
- ALARM  SCROLL 3  -
High rate alarm
> NO <
CHOICE  ENTER   SCALE #
```

Password: Operator

Default: NO
Selections: YES, NO

If the selection in the previous screen was YES, enter the threshold set points for the alarm.

The **UNITS** key allows the operator to specify the set points in engineering units. The **% key** selects set points in percent referring to scale capacity

```
- ALARM  SCROLL 3A -
High rate,
set  90  %
ENTER   UNITS   SCALE #
```

Password: Operator

Default: 90%
Min: 0 %
Max: 105 %

Enter the desired delay time before the alarm is monitored.

```
- ALARM  SCROLL 3B -
High rate,
delay 2 sec
ENTER              SCALE #
```

Password: Operator

Default: 2 sec
Min: 0 sec
Max: 90 sec

A.6.2.4 Define Low Rate Alarm

Use the **CHOICE** key to turn on or off the high rate alarm. Confirm with **ENTER.**

```
- ALARM  SCROLL 4  -
Low rate alarm
> NO <
CHOICE  ENTER   SCALE #
```

Password: Operator

Default: NO
Selections: YES, NO

If the selection in the previous screen was YES, enter the threshold set points for the alarm.

The **UNITS** key allows the operator to specify the set points in engineering units. The **% key** selects set points in percent referring to scale capacity

```
- ALARM  SCROLL 4A -
Low rate,
set    %
ENTER   UNITS   SCALE #
```

Password: Operator

Default: 10%
Min: 0 %
Max: 105 %

Enter the desired delay time before the alarm is monitored.

```
- ALARM  SCROLL 4B -
Low rate,
delay ___ sec
ENTER              SCALE #
```

Password: Operator

Default: 2 sec
Min: 0 sec
Max: 90 sec

A.6.2.5 Define High Positive Deviation Alarm

```
- ALARM  SCROLL 5  -
H  Pos. Dev Alarm
> NO <
CHOICE  ENTER   SCALE #
```

Password: Operator

Default: NO
Selections: YES, NO

Only if High Positive Deviation Alarm selected.

Enter the Set Point in % and the activation delay

```
- ALARM  SCROLL 5A -
H  Pos. Dev.  set
  10 %          10 sec
ENTER  SET/DELAY   SCALE #
```

Password: Operator

Default: 10% 10 sec
Min: 0 % 0 sec
Max: 105 % 90 sec

A.6.2.6 Define High High Positive Deviation Alarm

```
- ALARM  SCROLL 6  -
HH  Pos. Dev Alarm
> NO <
CHOICE  ENTER   SCALE #
```

Password: Operator

Default: NO
Selections: YES, NO

Only if High High Positive Deviation Alarm selected.

Enter the Set Point in % and the activation delay

```
- ALARM  SCROLL 6A -
HH  Pos. Dev.  set
  20 %          10 sec
ENTER  SET/DELAY   SCALE #
```

Password: Operator

Default: 20% 10 sec
Min: 0 % 0 sec
Max: 105 % 90 sec

A.6.2.7 Define High Negative Deviation Alarm

```
- ALARM  SCROLL 7  -
H  Neg.. Dev Alarm
> NO <
CHOICE  ENTER   SCALE #
```

Password: Operator

Default: NO
Selections: YES, NO

Only if High Negative Deviation Alarm selected.

Enter the Set Point in % and the activation delay

```
- ALARM  SCROLL 7A -
H  Neg.. Dev.  set
  10 %          10 sec
ENTER  SET/DELAY   SCALE #
```

Password: Operator

Default: 10% 10 sec
Min: 0 % 0 sec
Max: 105 % 90 sec

A.6.2.8 Define High High Negative Deviation Alarm

```
- ALARM  SCROLL 8  -
HH  Neg.. Dev Alarm
> NO <
CHOICE  ENTER   SCALE #
```

Password: Operator

Default: NO
Selections: YES, NO

Only if High High Negative Deviation Alarm selected.

Enter the Set Point in % and the activation delay

```
- ALARM  SCROLL 8A -
HH  Neg.. Dev.  set
  20 %          10 sec
ENTER  SET/DELAY   SCALE #
```

Password: Operator

Default:	20%	10 sec
Min:	0 %	0 sec
Max:	105 %	90 sec

A.6.2.9 Setup Alarm Modes

The following message is displayed for three seconds.

```
- ALARM  SCROLL 9
- ALARM DEFINITION -
Use NEXT key or
enter alarm number
```

After three seconds, the **ALARM** screen is displayed. The user can use the CHOICE soft key to select the desired mode between ALARM (just a warning message), SHUT DOWN, (warning plus fault output) and NONE (no action). Confirm with ENTER. Use the NEXT key to scroll between alarms, or enter the alarm number.

```
- ALARM  NUMBER # 1
  Clock Fail
Set as    > ALARM <
  CHOICE  ENTER   NEXT
```

Password: Service

A.7. MAIN MENU 5

Main Menu 5 is dedicated to the serial option. **COMM A** is used to set up the serial line and **PRINT** is used for setting up the printer output. Main Menu 5 does not appear unless an optional COMM A is installed.

```
-   MAIN MENU 5
  Press MENU for more

COMM A   COMM B    PRINT
```

A.7.1. Communication A Scroll

The *MT 3104* has one serial channel, which can be configured using jumpers as an RS232 or an RS485 channel. The serial channel can be used for printing or for a serial communication with an intelligent device such as a PLC or a PC. An additional COMM A board can be installed and programmed, typically one for the printer and one for networking.

The following screens define the communication parameters for the first and the second channel.

```
COMM A SCROLL 1
Baud Rate port #1
> 2400 <
CHOICE        ENTER
```

Password: Service

Default: 9600
Selections: 110, 150, 300, 600, 1200, 2400, 4800, 9600, 19200

```
- COMM. A SCROLL 2 -
Set parity port #1
> No parity <
CHOICE  ENTER
```

Password: Service

Default: NO PARITY
Selections: EVEN PARITY, ODD PARITY, NO PARITY

```
- COMM. A SCROLL 3 -
Stop bits port #1
> 1 stop bit <
CHOICE  ENTER
```

Password: Service

Default: 1 STOP BIT
Selections: 1 STOP BIT, 2 STOP BITS

```
- COMM. A SCROLL 4 -
Wordlength port #1
> 8  bits <
CHOICE  ENTER
```

Password: Service

Default: 8 BITS
Selections: 7 BITS, 8 BITS

Some commonly used protocols are implemented in the system. See Communication Protocols, REC 3949, for the details. Possible selections are:

- *PC-MASTER -Thermo* proprietary protocol: Multi Drop, Master Slave.
- *SIEMENS 3964R* - A proprietary protocol of Siemens. Point to point, Multi Master.
- *ALLEN BRADLEY DF1* - A proprietary protocol of Allen Bradley. Multi Drop, Master Slave.
- *MODBUS* - A proprietary protocol of AEG. Multi Drop, Master Slave.
- *PRINTER* - Not a protocol, selects printer output.

```
-COMM. A SCROLL  5 -
Protocol port #1
> PC MASTER <
CHOICE  ENTER
```

Password: Service

Default: MODBUS
Selections: PC-MASTER, SIEMENS 3964R, ALLEN BRADLEY DF1, MODBUS, PRINTER

If the selected protocol is not PRINTER, the following screens define the ADDRESS of the device in the multi drop line, and the access permission from the remote supervisor. If NONE is selected, the supervisor has full access to the device. If LIMITED is selected; there is supervisor only access to those variables. If PROTECTED is selected, the unit is write protected.

```
-COMM. A SCROLL 5A -
Clear to send #1
> disabled <
CHOICE  ENTER
```

Password: Service

Default: DISABLED
Selections: DISABLED, ENABLED

```
-COMM. A SCROLL 6 -
Address port #1
  1
ENTER
```

Password: Service

Default: 1
Min: 1
Max: 255

```
-COMM. A SCROLL 7 -
Access lev. prot. port #1
> None <
CHOICE  ENTER
```

Password: Service

Default: NONE
Selections: NONE, LIMITED, PROTECTED

If an optional communication board is installed, the following screen appears. These screens operate exactly as the ones dedicated to Port 1.

```
- COMM. A SCROLL 8 -
Baud rate port #2
> 2400 <
CHOICE  ENTER
```

Password: Service

Default: 9600
Selections: 110, 150, 300, 600, 1200, 2400, 4800, 9600, 19200

```
- COMM. A SCROLL 9 -
Set parity port #2
> No parity <
CHOICE  ENTER
```

Password: Service

Default: NO PARITY
Selections: NO PARITY, EVEN PARITY, ODD PARITY

```
- COMM. A SCROLL 10 -
Stop bits port #2
> 1 stop bit <
CHOICE  ENTER
```

Password: Service

Default: 1 STOP BIT
Selections: 1 STOP BIT, 2 STOP BITS

```
- COMM. A SCROLL 11-
Wordlength port #2
> 8  bits <
CHOICE  ENTER
```

Password: Service

Default: 8 BITS
Selections: 7 BITS, 8 BITS

```
-COMM. A SCROLL 12 -
Protocol port #2
> PC MASTER <
CHOICE  ENTER
```

Password: Service

Default: MODBUS
Selections: PC MASTER, SIEMENS 3964R, ALLEN BRADLEY DF1, MODBUS, PRINTER

Only if protocol of port #2 is not PRINTER:

```
- COMM. A SCROLL 12A
Clear to send #2
> Disabled <
CHOICE  ENTER
```

Password: Service

Default: DISABLED
Selections: DISABLED, ENABLED

```
- COMM. A SCROLL 13-
Address port #2
 1
ENTER
```

Password: Service

Default: 1
Min: 1
Max: 255

```
- COMM. A SCROLL 14-
Access port. port #2
> None <
CHOICE  ENTER
```

Password: Service

Default: NONE
Selections: NONE, LIMITED, PROTECTED

A.7.2. Communication B (Field Bus)

Refer to the Field Bus manual if this option is installed.

A.7.3. Print

The *Micro-Tech 3104* has a fully programmable printer format. The following section explains how to program it according to the specific needs.

1. Define Handshaking

   The system can be configured to operate without a handshake (NONE), using the Clear to Send signal (CTS), or the XON-XOFF sequence. Refer to the printer instruction manual to define which selection is required. The selection NONE is only used for testing purposes. It is not recommended for normal use. If NONE is selected, the system is not able to recognize if the printer is on line or not, or if the paper is empty.

   The most commonly used protocol is the CTS, which is a signal generated by the printer to indicate whether it is ready to receive data or not.

```
-PRINTER SCROLL 1  -
Handshaking
>_None_<
CHOICE  ENTER
```

Password: Service

Default: NONE
Selections: NONE, CTS, XON-XOFF

Different printers use different end of line patterns. Select the one you need for your printer.

```
-PRINTER SCROLL 2  -
End of line
>_CR_<
CHOICE  ENTER
```

Password: Service

Default: CR
Selections: CR, LF, CR+LF

Some printers cannot accept characters while they are printing. In some cases, the handshake is not well controlled by the printer, so a delay at end of line is helpful.

```
-PRINTER SCROLL 3  -
Delay end of line
 0  sec
ENTER
```

Password: Service

Default: 0 sec
Min: 0 sec
Max: 5 sec

A form feed character can be sent to the printer after each report to force the printer to eject the paper. If NO is selected, a normal END OF LINE character(s) is printed at the end of the report.

```
PRINTER SCROLL 4  -
Form Feed
> NO <
CHOICE  ENTER
```

Password: Service

Default: NO
Selections: NO, YES

A.7.3.1 Periodical Printing

If you want to generate periodical printing, enter the number of minutes, hours, or days in the following screen. Entering 0 prevents periodical printing. Use the INTV key to switch from minutes to hours and to days.

```
-PRINTER SCROLL 5  -
Print interval
 0  min
ENTER        INTV
```

Password: Operator

Default: 0 min
Min: 0 min, 0 hour, 0 days
Max: 59 min, 23 hour, 365 days

The system can print at specific times during the day. Enter the time you want to obtain the printing. Use the NEXT key to scroll between the print times (maximum 4). The ON/OFF key enables or disables the displayed print time.

```
-PRINTER SCROLL 6  -
Print time # 1
time  HH:MM
ENTER  ON/OFF  NEXT
```

Password: Operator

	If 24 hours	**If am/pm**
Default:	OFF	OFF
Min:	00:00	01:00
Max:	23:59	12:59

A.7.3.2 Define Print Format

By selecting YES in the following screen, the system is instructed to print one line each time a new alarm condition occurs. The alarm is printed as follows:

xx-xx-xxxx yy:yyz

kkkkkkkkkkkkkkkkkkkk

Where:

xx-xx-xxxx Day, Month, Year, printed according to the local format as defined in Main Menu 2 - Display Scroll, Section 4.2 of this Appendix.

yy:yyz Hour, Minutes, am/pm printed according to the local format as defined in Main Menu 2 - Display Scroll, Section 4.3 of this Appendix.

kkkkkkkkkkkkkkkkkkkk Alarm message, same message appearing on the screen

For example:

01-22-1998 8:14a

Clock Fail

```
- PRINTER SCROLL 7 -
Print alarms
> No <
CHOICE  ENTER
```

Password: Operator

Default: NO
Selections: YES, NO

There are two ways for defining the printing format. The first is to use the predefined format (see Section A.7.2.3).
The second is to define your own format, using the printer setup screens listed below.
Select DEFAULT if you want the predefined format. Select USER DEFINED if you want to set up your own format.

```
- PRINTER SCROLL 8 -
Total report format
> Default  <
CHOICE  ENTER
```

Password: Service

Default: DEFAULT.
Selections: DEFAULT, USER DEFINED

If your selection is USER DEFINED, the following screens are displayed.

Define if you want to add a heading string in your report. String can be used to add the Customer name as well as other information that you want to include in the print format.

```
- PRINTER SCROLL 9 -
String #1
> yes <
CHOICE          ENTER
```

Password: Operator

Default: NO
Selections: YES, NO

If you selected YES, the next two scrolls are displayed.

This first one allows the operator to define the string. Use the alphanumeric keypad, pressing the numeric key corresponding to the letter that you want to type. Every time you press a new key, the cursor moves to the right one place. If you need to use two times the same key (example for double letters), move the cursor right using the arrow keys (left and right soft keys).

```
- PRINTER SCROLL 9A -
Contents string #1
xxxxxxxxxxxxxxxxxxxx
<   ENTER    >
```

Password: Operator

Default: xxxxxxxxxxxxxxxxxxxx

Once you have defined the string, specify where the string has to be placed on the printed report. The coordinate is given in the following way:

```
   00000000001111111111222222222223...
   01234567890123456789012345678 90...
  +---------------------------------------------> X
00|This line printed first
01|This line printed second            ^
02|                                    | DIRECTION OF
03|                                    | PAPER
04|
05|
06|
. v
. Y
```

Use the X-pos and Y-pos keys to enter the X and Y coordinates. Confirm with ENTER. By specifying 0,0, the string is not printed.

```
- PRINTER SCROLL 9B -
Position string #1
X = 0 , Y = 0
ENTER      X\Y-pos
```

Password: Operator

	X	**Y**
Default:	1,	1
Min:	0,	1
Max:	24,	80

Define if you want to add a second heading string in your report.

```
- PRINTER SCROLL 10 -
String #2
> yes <
CHOICE            ENTER
```

Password: Operator

Default: NO
Selections: YES, NO

If you selected YES, the next two scrolls are displayed.

```
- PRINTER SCROLL 10A -
Contents string #2
___________
<    ENTER    >
```

Password: Operator

Default: = =

```
- PRINTER SCROLL 10B -
String #2  pos.
X =___, Y =___
ENTER      X\Y-pos
```

Password: Operator

	X	**Y**
Default:	2,	1
Min:	0,	1
Max:	24,	80

There is a third string. If only one scale is defined, it is a third heading string exactly as the previous two. If more scales are defined, it may be used to define a scale identifier. String definition is different for each scale and it is used as scale heading.

```
- PRINTER SCROLL 11 -
String #3
> yes <
CHOICE            ENTER
```

Password: Operator

Default: NO
Selections: YES, NO
If you selected YES, the next two scrolls are displayed

SCALE # key allows the operator to select the scale.

```
- PRINTER SCROLL 11A -
Contents string #3
_____________________
            SCALE #
```

Password: Operator

Default: = =

If only 1 scale is defined or more scales are defined, the ENTER and ARROWS keys compare in the fourth line of the display when the numeric or alphanumeric key is pressed.

```
- PRINTER SCROLL 11B -
String #3  pos.
X =___, Y =___
ENTER      X\Y-pos
```

Password: Operator

	X	Y
Default:	3,	1
Min:	0,	1
Max:	24,	80

A series of variables can be added in the report. Variable are: MASTER TOTAL, RESET TOTAL, DATE, TIME, WEIGHT, and RATE

The position must be defined for each variable. If you do not intend to add a variable in the report, you should set its X position to 0.

```
- PRINTER SCROLL 12 -
Date position
X =___, Y =___
ENTER      X\Y-pos
```

Password: Operator

	X	Y
Default:	4,	1
Min:	0,	1
Max:	24,	80

```
- PRINTER SCROLL 13 -
Time position
X =___, Y =___
ENTER      X\Y-pos
```

Password: Operator

	X	Y
Default:	5,	1
Min:	0,	1
Max:	24,	80

```
- PRINTER SCROLL 14 -
Reset total position
X =___, Y =___
ENTER      X\Y-pos
```

Password: Operator

	X	Y
Default:	6,	1
Min:	0,	1
Max:	24,	80

```
- PRINTER SCROLL 15 -
Master total position
X =___, Y =___
ENTER      X\Y-pos
```

Password: Operator

	X	Y
Default:	7,	1
Min:	0,	1
Max:	24,	80

```
- PRINTER SCROLL 16 -
Weight position
X =___, Y =___
ENTER      X\Y-pos
```

Password: Operator

	X	Y
Default:	0,	1
Min:	0,	1
Max:	24,	80

```
- PRINTER SCROLL 17 -
Rate position
X =___, Y =___
ENTER      X\Y-pos
```

Password: Operator

	X	Y
Default:	0,	1
Min:	0,	1
Max:	24,	80

A.7.3.3 The PRINT Key

The PRINT MENU is accessible by press the PRINT key in the Run Menu or, if more scales are defined, in Main Menu 1. It is a single screen menu, which allows the operator to select and start a print report.

The following screen is displayed:

```
- PRINTER SCROLL-
COM #1 no data
Start print TOTALS
PRINT  RETURN  COM
```

Password: Not required

The second line gives the status of the printer:

NO DATA Indicates the printer is idle, no data are being sent to the printer.

IS RUNNING The system is sending data to the printer.

The third line indicates what kind of data is printed if the PRINT key is pressed. The UP and DOWN keys select between:

TOTALS Print totals (all scales if more scales defined).

TOTALS S1 Print total scale 1 (only if enable)

TOTALS S2 Print total scale 2 (only if enable)

SETUP Print the setup data of the instrument. (Not available in this version)

TRAILS If audit trails option is active, audit trail data is printed

Print starts after the **PRINT** key is pressed.

The **COM** key allows the operator to select the printer in case more than one is installed.

Here are some examples of data that can be printed:

Print TOTALS, default

If one scale is defined:

TOTALS REPORT

DATE: 01-22-2003

TIME: 8:12a

MASTER TOTAL: 0.00 Tons

RESET TOTAL: 0.00 Tons

If more scale is defined:

TOTALS REPORT

DATE: 01-22-2003

TIME: 8:12a

SCALE 1

MASTER TOTAL: 0.00 Tons

RESET TOTAL: 0.00 Tons

SCALE 2

MASTER TOTAL: 0.00 Tons

RESET TOTAL: 0.00 Tons

Print ALARM:

01-22-2003 8:14a

Clock fail

Print AUDIT TRAILS: (Optional)

When print AUDIT TRAILS command is given, the number of records to print is required. This allows the operator to print a portion of the recorded trails.

TRAIL RECORD NR 1

DATE 01-22-2003 TIME 11:59p

VARIABLE scale cap

NEW 400.00

OLD 500.00

TRAIL RECORD NR 2

DATE 01-22-2003 TIME 11:31p

VARIABLE span

NEW 250000

OLD 300000

TRAIL RECORD NR 3

DATE 01-22-2003 TIME 11:59p

VARIABLE div (e)

NEW 0.05

OLD 0.1

A.8. MAIN MENU 6

Main Menu 6 is dedicated to Audit Trails and Linearization.

```
      - MAIN MENU 6 -
Press MENU for more
AUDIT
 TRAIL            LINEAR
```

A.8.1. Audit Trail

This menu is only displayed if the Audit Trails option is installed.

Audit trail meets NIST HB 44 Category 3: Remote configuration capability, access may be unlimited or controlled through a password. It consists of an event logger that includes an event counter (000 to 999), the parameter description, the date, and time of the change, and the old and new value of the parameter. Parameters may be configuration parameters or routine calibration.

Events and changes may be viewed on the *Instrument'* s display or printed out by an on-site printer.

The Logger records the before and after setting all configuration parameters that affects the calibration of the scale It also records when calibration was performed. The **Event Counter** increments one count for each event.

Audit trail records the time and displays the new and old data for any change in the parameters and functions listed below, indicating each by an event number:

Parameter's Name	Meaning
w unit	Weight unit
r unit	Rate unit
t unit	Total unit
s div	Scale division
audit	Audit trail option
Ic sen	Loadcell sensitivity
s cap	Scale capacity
r cap	Rate capacity
lc cap	Loadcell capacity
lc nr	Loadcell number
lc rl	Loadcell 1 resistance
……	……
lc r6	Loadcell 6 resistance
test w	Test weights for WTS span calibration
rcal r	Rcal resistance for Rcal span calibration
damp w	Damping weight
damp rq	Damping rate
line 1	Linearization factor 1 (0-10%)
……	……
line 10	Linearization factor (90-100%)
span	Span
zero	Zero
rcal c	Rcal calibration constant
rcal f	Rcal factor

Function's Name	Meaning
Autozero	Autozero function has been executed
Autospan Rcal	Autospan with Rcal method has been executed
Auto span WTS	Auto span with test weight method has been executed
Cold Start	All instrument data has been lost
M.total cleared	Master total register has been cleared

```
- AUDIT TRAILS 1 -
Audit trails
NO
CHOICE  ENTER
```

Password: Service

Default: No
Selections: Yes, No

If the audit trails are enabled, meaning YES is selected, the following screen appears for a short time (3 seconds):

```
- AUDIT TRAILS -
Use scroll keys or
enter trail number
```

After 3 seconds, the next screen is shown:

```
TRAIL EVENT No. 0000
hh:mm    dd-mm-yyyy
ss  nnnnnn = vvvvvvv/O (ld)
ss  nnnnnn = vvvvvvv/N (ew)
```

hh:mm	Time of change
mm-dd-yyyy	Date of change, the format may vary depending on the Country
ss	Identifies the scale (only if more scales are defined)
nnnnnn	Parameter's name
vvvvvv	Parameter's value, before change (old) after change (new)

Time and date are shown only if an optional Communication board is installed.

The user can scroll between events, which are displayed in order of date, and time. The user can also enter a number to display a specific event.

A.8.2. Linearization

Manual linearization can be accomplished by applying a known test weight(s) or loading the bin with pre-weighed material and calculation the scale error. Pressing the ACQuire soft key displays the scale weight for the applied known weight. The operator can then enter in a correction factor. Up to five correction factors can be installed in any order and will be internally sorted by scale loading.

Linearization must first enable in Main Menu 6 before any menu screens will appear.

Note: Prior to performing a manual linearization, the scale should be properly zeroed.

1. Press the **MENU** key repeatedly until Main Menu 6 appears.

```
- MAIN MENU 6 -
Press MENU for more

          LINEAR
```

Press **LINEAR** soft key to access the Linearization scroll. The following screen appears.

Press **CHOICE** for selections, **YES** to enable, or **NO** to disable linearization. Once enabled, no linearization is done until the operator manually enters the linearization factors.

```
    - LINEARIZATION 1 -
Linearization
NO
CHOICE            ENTER
```

Password: Service

Default: NO
Selections: YES, NO

- **NO** turns off linearization and sets all factors to 1.00
- **YES** turns on linearization.

1. Set linearization to **NO** and return to the **RUN** screen.
2. Apply bin loading at the points to be linearized. Record the indicated weight for each point.
3. Calculate the correction factor for each point using the following formula:

Correction Factor = Actual or reference weight / Displayed weight

4. Enter linearization factors

Once the factors have been computed, they must be re-entered. Press the **MENU** key repeatedly until the **LINEAR** soft key is displayed. Press this soft key and then **DOWN ARROW**. Set linearize to **YES**, press **ENTER**. Press the **DOWN ARROW** key to LINEARIZ #1.

Type in the first weight recorded in Step 4 and press **ENTER**

```
- LINEARIZ #1 -
Weight      0.0  lb
Fact.       1.00000
ENTER    WTS
```

If ENGLISH or MIXED

Default: 0.0 lbs
Min: 0.0 lbs
Max: 500.0 lbs

If METRIC

Default: 0.0 lbs
Min: 0.0 lbs
Max: 226.8 lbs

Type in the first factor calculated in Step 4 and press **ENTER**

If you enter 1.000 (default value), the load will not be corrected in that portion of the range. A number lower than 1.000 will reduce the span, while a number larger than 1.000 will increase the span.

Default: 1.000000
Min: 0.000000
Max: 1.500000

Press the **DOWN ARROW**. Repeat Step 5 for all remaining calculated factors.

A.9. MAIN MENU 7

Main Menu 7 contains setup and configuration screens for two independent control loops and enables the operator to define the characteristics and parameters of the loss-in- weight system. If a dual or second single A/D board is installed, the Scale #1 or 2 soft key is visible. Pressing the key switches scales.

```
- MAIN MENU 7 -
Press MENU for more
CNTR        SYSTEM
```

A.9.1. Control Scroll

The controller output is fully configurable as a PID or P.E.I.C. controller. The controller can act as Master or Slave or in closed loop. The following section explains how to configure the controller. Steps 1 through 11 configure PID Loop 1 and Steps 3 through 23 configure PID Loop 2.

A.9.1.1 Control Action During Shutdown

When the feeder is shutdown (feeder running contact open) and the controller is in auto mode, the control output may correspond to one of the following programmable selections.

- Locked on the last value before shutdown or
- Locked on a vale from 1 to 100% as entered through the keyboard

When the feeder is started, the controller begins the control action from the value at which the output was locked at shutdown.

A feeder run normally open contact is required.

```
- CNTRL SCROLL 1 -
Start out
> Sel <
CHOICE  ENTER   SCALE #
```

Password: Operator

Default: SEL
Selections: LOCK, SEL

When the feeder is not running (feeder running contact open), the control output can be locked (LOCK) to the last value, or set (SEL) to the value entered in the next screen.

Only if START OUT is set to SEL:

```
- CNTRL     SCROLL 1A -
Set control value
0 %
ENTER            SCALE #
```

Password: Operator

Default: 0 %
Min: 0 %
Max: 100 %

A.9.1.2 High Control Limit

The control output, when in AUTO, cannot exceed this value

```
- CNTRL 1    SCROLL 3 -
High control limit
100 %
ENTER            SCALE #
```

Password: Operator

Default: 100 %
Min: 0 %
Max: 100 %

A.9.1.3 Low Control Limit

The control output, when in AUTO, cannot be lower this value

```
- CNTRL 1    SCROLL 4 -
Low control limit
0 %
ENTER              SCALE #
```

Password: Operator

Default: 0 %
Min: 0 %
Max: 100 %

Proportional Band

Proportional control actions respond to the amount of process deviation from setpoint. It changes the position of the final control element, in direct proportion to the difference between process variable and setpoint. The proportional band is expressed as that percentage of the total scale range, which corresponds to the full corrective range of the final control element. If proportional band is set to 100%, then a 0 to 100% process variable change causes the output to change 100% of its range. If proportional band is set to 200%, then a 0 to 100% process variable change causes the output to change 50% of its range.

```
- CNTRL 1    SCROLL 5 -
Proportional band
200 %
ENTER              SCALE #
```

Password: Operator

Default: 200 %
Min: 50 %
Max: 900 %

Entering 0% turns off proportional band term.

A.9.1.4 Integral (Reset) Time

Reset action responds to a combination of the amount and duration of the process deviation. Integral time sets the slope of the output correction signal. A 100% change in process variable results in a 100% change in output correction signal at the integral time entered.

Set integral time to 0 to inhibit action or if control mode is P.E.I.C

```
- CNTRL     SCROLL 6 -
Integral time
0.1 min
ENTER            SCALE #
```

Password: Operator

Default: 0.1 min
Min: 0 min
Max: 10 min

Entering 0 time turns off proportional integral term.

A.9.1.5 Derivative (Rate) Time

Rate action responds to the speed and direction of the process deviation. In most feeder applications, derivative is set to zero.

Set derivative time to 0 to inhibit action if control mode is P.E.I.C.

```
- CNTRL     SCROLL 7 -
Derivative time
0.0 min
ENTER            SCALE #
```

Password: Operator

Default: 0 min
Min: 0 min
Max: 10 min

A.9.1.6 P.E.I.C. Time (Process Lag)

Process lag is the time duration following a change in the control element until the effect of that change can be measured at the source of the process variable signal. Lag may be measured in the process by making a small manual change in the final control element and observing the elapse time until the process variable display shows the effect of the change. P.E.I.C. control mode is always disabled when time is set to 0.Setting the time to other than zero enables raise and lower digital outputs to become active. Control output may be analog or time proportional.

```
- CNTRL      SCROLL 8 -
P.E.I.C. time
0 sec
ENTER            SCALE #
```

Password: Operator

Default: 0 min
Min: 0 min
Max: 500 min

When set to 0, there is not a P.E.I.C. action. Control output can be analog or time proportional. If time proportional, see Main Menu 4, I/O Definition scroll, digital outputs.

A.9.1.7 Set Point Source

Define the setpoint source. Local setpoint should always be entered by keyboard, remote setpoint can be received from serial line or analog input. If ANALOG IN or SERIAL IN is selected, the LOC/REM key (or LOC/REM digital input) is used to switch from local to remote setpoint.

```
- CNTRL   SCROLL 9 -
Setpoint source
LOCAL
ENTER            SCALE #
```

Password: Service

Default: LOCAL
Selections LOCAL, ANALOG IN, SERIAL IN

A.9.1.8 Setpoint Units

```
- CNTRL   SCROLL 10 -
Setpoint units
ENGINEERING
CHOICE     ENTER
```

Password: Service

Default: ENGINEERING
Selections: ENGINEERING, PERCENT

Only if setpoint source is REMOTE (Analog in, Serial in), enter a setpoint delay and scales down the remote setpoint.

This delay shifts the remote setpoint signal in time.

```
- CNTRL     SCROLL 11 -
Setpoint delay
0 SEC
ENTER              SCALE #
```

Password: Service

Default: 0 min
Min: 0 min
Max: 500 min

For control systems where several weigh feeders operate in ratio control, it may be that the transport lag time from each feeder to the mixing point is different. To insure a correct ratio at the mixing point, an analog delay can be entered for remote setpoint.

```
- CNTRL     SCROLL 12-
Percent of ingredient
0 %
ENTER
```

Password: Operator

Default: 100 %
Min: 0 %
Max: 100 %

A.9.1.9 Process Variable Damping

Process variable damping averages the process variable to avoid undersized jumps of the control output.

```
- CNTRL     SCROLL 13-
Process var damping
0 sec
ENTER              SCALE #
```

Password: Operator

Default: 0 sec
Min: 0 sec
Max: 120 sec

A.9.1.10 Enable PID+S

Enable the PID+S function for quick control response when setpoint changes.

```
- CNTRL     SCROLL 14-
PID + S function
> NO  <
CHOICE   ENTER   SCALE #
```

Password: Operator

Default: NO
Selections YES, NO

A.9.1.11 Jump Cut-Off Function

The Jump Cut-Off function, when enabled, eliminates system instability that may be caused by temporary disturbances that may cause the rate of flow indication to jump. Example: A vibrator that periodically shakes the hopper Jump is enabled in the following scroll and is based on two parameters: the delay (CO_DELAY) and the deviation (CO_DEV).

After batch start, the system tries to reach the desired setpoint and during this time, the Jump Cut-Off is inactive. When the error between flow rate and setpoint enters the bandwidth defined by CO_DEV and stays in this range for a minimum of 1 second, Jump Cut-Off assumes the system is stable. At the same time, it starts to monitor the deviation.

If the deviation moves outside the CO_DEV limit, the Jump Cut-Off forces the rate to equal the setpoint and sets a timer to CO_DELAY value. When the timer reaches zero, the rate is released to the real value, restarting normal control action. The time may be longer if two conditions are detected during the time interval:

A change in polarity of the error if an error is detected; the timer is restarted and set to CO_DELAY value.

If after the initial peak starts to decrease, that forced the error outside its limits and the error decreasing, the time is frozen until the error enters the stability band or reverts its trend.

The period of time that the control is frozen is indicated by the letter “C” in the RUN scroll.

If the control action is not running

If the setpoint changes and the difference between the new and previous value is more than CO_DEV

```
- CNTRL    SCROLL 15-
Jump Cut-Off
> YES  <
CHOICE   ENTER   SCALE #
```

Password: Service

Default: NO
Selections YES, NO

If YES is selected, the following two scrolls appear.

Defines CO_DELAY TIME

```
- CNTRL    SCROLL 15A-
Delay
 5 sec
ENTER        SCALE #
```

Password: Service

Default: 5 sec
Min: 1 sec
Max: 120 sec

Defines CO_DEV, stability range and cut-off limits.

```
- CNTRL    SCROLL 15B-
Deviation
 5.0 %
ENTER        SCALE #
```

Password: Service

Default: 5.0 %
Min: 0.1 %
Max: 50 %

A.9.1.12 Autotuning

Selecting YES in the next scroll enables the autotuning mode. Autotuning allows an increased speed response of the system at the start and when the setpoint changes. When active, the loss-in-weight controller automatically determines the regulation parameters. The rate interval and the weight constant is the basis of the regulation error.

```
- CNTRL    SCROLL 16-
Autotuning
  NO
CHOICE   ENTER   SCALE #
```

Password: Service

Default: NO
Selections: NO, YES

A.9.2. System Scroll

The System Scroll defines the characteristics and parameters of the loss in weight system.

A.9.2.1 Setting Maximum Rate and Dead Band

The first entry is the rate capacity, which is the maximum rate of the scale.

```
- SYSTEM   SCROLL 1-
Max rate capacity
 100.0  Lb/h
ENTER          SCALE #
```

Password: Service

Default: 100.0
Min: 1
Max: 200000

A.9.2.2 Enter Minimum Rate

```
- SYSTEM   SCROLL 2-
Min rate capacity
 0.0  Lb/h
ENTER          SCALE #
```

Password: Service

Default: 0.0
Min: 5.0
Max: 0.0

A.9.2.3 Setting Refill Parameters

Define the two-weight setpoint for starting and stopping the refill. Setpoints can be entered in percent of scale capacity or in engineering units. Press the UNIT key to switch between % and engineering units.

Enter the start refill set.

```
- SYSTEM   SCROLL 4-
Start refill set
 20 %
ENTER   UNITS  SCALE #
```

Password: Operator

Default: 20 %
Min: 0 %
Max: 105 %

Enter the end refill set.

```
- SYSTEM    SCROLL 5-
End refill set
 80 %
ENTER    UNITS  SCALE #
```

Password: Operator

Default: 80 %
Min: 0 %
Max: 105 %

Define if refill can be executed when the system is in manual mode.

```
- SYSTEM SCROLL 6-
Refill on manual
  >NO<
CHOICE   ENTER   SCALE #
```

Password: Operator

Default: NO
Selections: NO, YES

At the end of the refill, the system waits the time specified before restarting normal action (control and rate computation)

```
- SYSTEM    SCROLL 7-
End refill time
 10 sec
ENTER            SCALE #
```

Password: Operator

Default: 10 sec
Min: 0 sec
Max: 600 sec

Refill must be completed in a shorter time than what is entered here. If it takes longer, an alarm is activated.

```
- SYSTEM    SCROLL 8-
Refill time-out
 90 sec
ENTER            SCALE #
```

Password: Operator

Default: 90 sec
Min: 0 sec
Max: 600 sec

A.9.2.4 Density Compensation

A difference of density may occur between the start and end of the refill. This determines a variation in the flow rate for the same control output. The rate will be lower at end of refill than it was at the beginning. This variation, due to the pressure of the material, may be compensated by the system.

```
- SYSTEM SCROLL 9-
Density compensation mode
  >none<
ENTER              SCALE #
```

Password: Operator

Default: NONE
Selections: NONE, CORRECT, SET, AUTO

If CORRECT is selected, enter the correction in percent.

```
- SYSTEM   SCROLL 9A-
Control out correct
    0 %
ENTER    +/-    SCALE #
```

Password: Operator

Default: 0 %
Min: 0 %
Max: 100 %

If SET selected, enter the control output value in percent.

```
- SYSTEM   SCROLL 9B-
Control out value
    0 %
ENTER    +/-    SCALE #
```

Password: Operator

Default: 0 %
Min: 0 %
Max: 100 %

A.9.2.5 Setting Rate Acquisition Parameters

The two parameters, which determine how the system computes the rate, are RATE INTERVAL and WEIGHT CONSTANT. They are defined in the next two scrolls.

```
- SYSTEM    SCROLL 10-
Rate interval
    1.0   sec
 ENTER            SCALE #
```

Password: Operator

Default: 1.0 sec
Min: 0.1 sec
Max: 10 sec

```
- SYSTEM    SCROLL 11-
Weight constant
    4
 ENTER            SCALE #
```

Password: Operator

Default: 4
Min: 1
Max: 16

Appendix B
System Design Information

B.1. Flow Rate Considerations

In a loss-in –weight system, the flow rate measurement is done by making the difference between two subsequent weight measurements. The time between the two measurements has to be short enough to keep the response time of the system within an acceptable value.

Therefore, the difference between the two weights is a very low value and it is strongly affected by any noise in the weight signal, which may be produced by vibrations of the mechanical parts.

The accuracy and stability of the flow rate measurements gets better under the following conditions:

- Increase of the speed variation of the weight signal by reducing the hopper discharge time and increasing the ratio between net weight and loadcell capacity.
- Reduction of the weight signal noise caused by mechanical vibrations by increasing the ruggedness of the mechanical structure supporting the weight hopper

To handle the above problems, the loss-in-weight controller provides various averaging and damping of the signals.

Each of the two weight values used to calculate the weight difference is the average of a number of weight measurements; this number is called “ WEIGHT CONSTANT” (W) and is adjustable from 2 to 16.

The time within two subsequent weight measurements is also adjustable and is called “RATE INTERVAL” (T) (value adjustable from 0.1 to 6.0 seconds).

The product of W times T is called “RATE FACTOR” (F), and defines the difference in time within the two-weight value, used to calculate the weight difference.

However, the program calculates and updates the flow rate value at each T time by using the values memorized on a number of memories equal to “W” shifted each one from the other of “T” time.

This means that after a step variations of actual flow rate the time required for the calculated flow rate to represent 100 % of the variations is equal to F with linear change from old to new value. (See Figure B-1).

Appendix Figure B-1: Loss of Weight Step Response

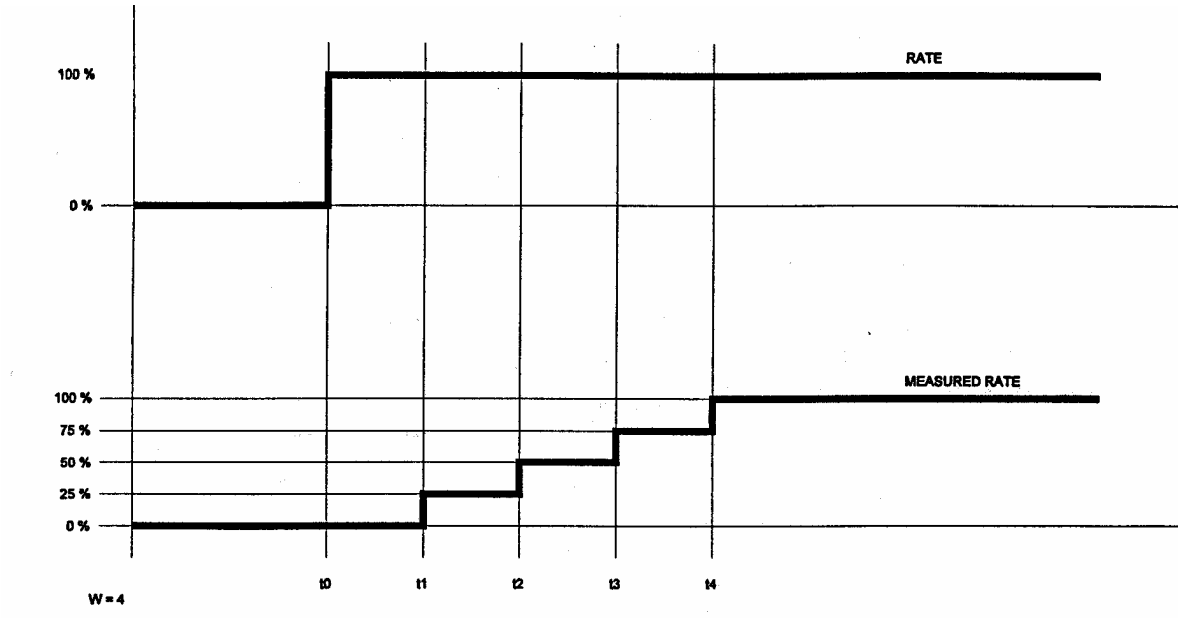

A damping action (asymptotic curve) can also be applied to the calculated flow rate value for additional filtering to compensate plant vibrations. On sizing a loss-in-weight system, extreme care should be taken to maintain the full-scale flow within the acceptable limits to avoid running into unstable operating conditions.

The minimum acceptable flow rate is given by the following formulas:

$$QFS \text{ min} = CTC / WORK \text{ hours}$$

$$F > 3600 \times WORK \text{ hours} \times 100 / RESOLUTION \times RATE \text{ accuracy}$$

Where:

*QFS*_min	[kg/h]	Minimum full scale rate
WORK_HOURS	[h]	Maximum number of working hours without refilling
RATE_ACCURACY	[%]	Required accuracy for rate
RESOLUTION	[counts]	Nominal resolution of the A/D converter at 100% of loadcell
CTC	[kg]	Total loadcell capacity

QFS max = *H* lev – *L* lev / *100* x *CAPACITY* / *WORK* hours

F < *3600* x *WORK* hours x *RATE* accuracy / *100*

Where :

*QFS*_man	[kg/h]	Maximum full scale rate
H_LEV	[%]	High Weight set point (stops refilling)
L_LEV	[%]	Low Weight set point (starts refilling)
CAPACITY	[kg]	Full scale weight

The system must be designed so that a value of parameter F can be determined, which satisfied both conditions.

In addition, discharge time larger than 3 hours has to be considered critical, because the effect of little vibrations would become acceptable to an extent that may compromise the functionality of the system.

In addition, the quality of the feeding machine must be taken in consideration. Low rates mean very small amounts of materials to be moved, so the feeding machine must be able to modulate the flow of material in the smoothest way, avoiding to from blocks of material or temporary absence of it.

****

THIS PAGE LEFT BLANK INTENTIONALLY

****

Appendix C
Linearization

Request *REC 3909* from the factory

****

THIS PAGE LEFT BLANK INTENTIONALLY

****

Appendix D
Digital and Analog Input/Output

The *Loss-in-Weight Controller* has provision for up to 24 programmable digital inputs and 24 programmable digital outputs. Standard I/O includes five programmable inputs, four programmable outputs, and one non-programmable Micro-Tech hardware fault output.

Optional DIO boards can be added if additional I/O is required.

D.1. Mother Board Digital I/O

D.1.1. Digital Inputs

(5) programmable digital (DC) inputs (Appendix Figure D-1)

- Optically isolated
- Powered by internal 24 V DIO supply, 6 mA
- Cable Length: 150 ohm maximum (7500 ft of 20 AWG)

Appendix Figure D-1: General Purpose Digital Inputs

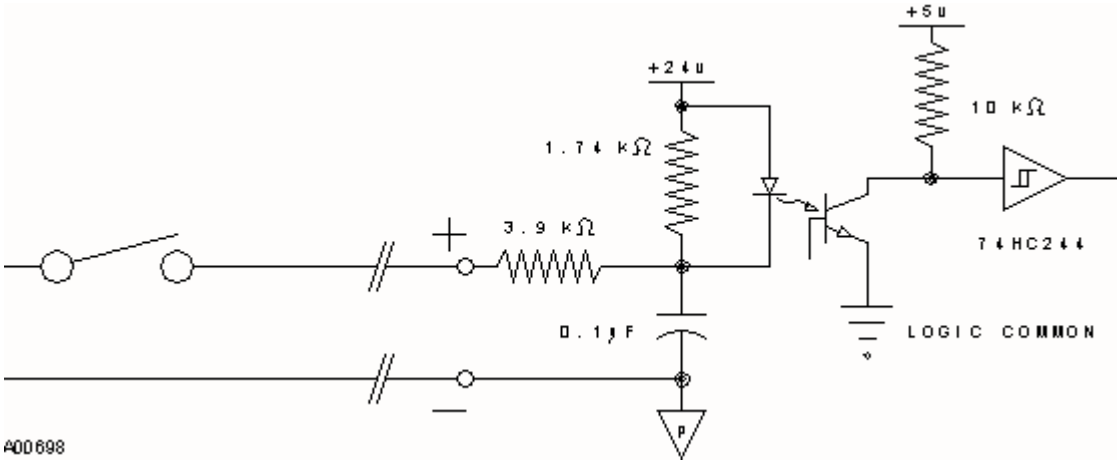

D.1.2. Digital Outputs

Four (3) programmable, and one (1) non-programmable failure, outputs (on Relay Board)(Appendix Figure D-2) One (1) output programmable (on Mother Board)

- Isolated Relay Outputs
- Solid state Output

Appendix Figure D-2: Isolated Relay Outputs

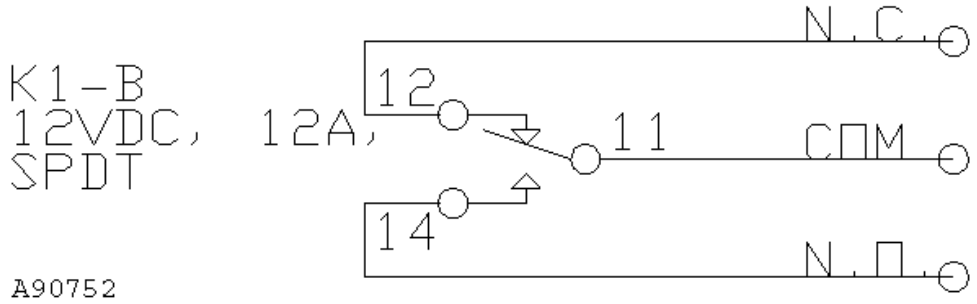

Appendix Figure D-3: Solid State Output

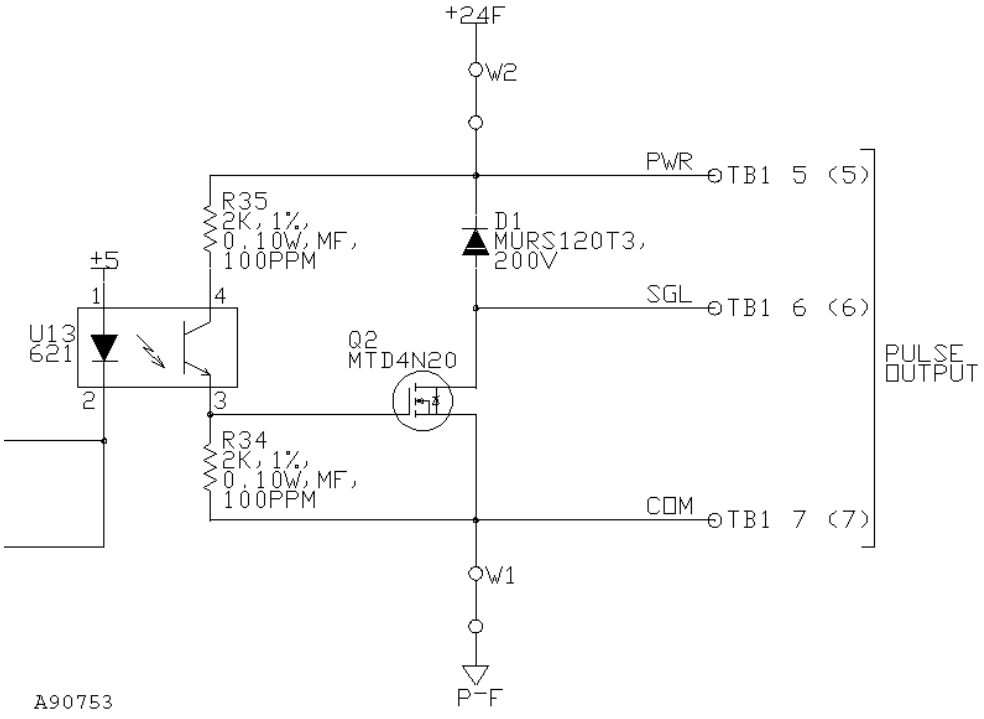

D.2. Digital Input/Output Board Configuration

In addition to the programmable digital inputs and outputs on the motherboard, optional Digital I/O (DIO) expansion boards can be added. Available boards are DIO input board 16 inputs/4 outputs, output board 16 outputs/14 inputs or 20 inputs/20 outputs by adding both boards.

Both DIO boards provide isolated contact closure inputs and 24-volt current sinking (default) or current coursing (consult Factory) isolated outputs. The DIO input board connector J16 is male 25 pin sub-miniature D Connector and the DIO output board connector J15 is a female connector.

Selectable jumpers OP1 and OP2 located on the lower right hand side of the DIO boards control internal or external 24 VDC power for the DIO boards. All inputs and outputs use the same selected power supply.

Appendix Table D-1: DIO Board Jumper Settings (OP1/OP2)

DIO BOARD JUMPER SETTINGS		
POWER SOURCE	OP1	OP2
INTERNAL	“A”	“A:
EXTERNAL	“B”	“B”

The isolated contact closure inputs are activated by completing the circuit from the input to the negative side of the 24 VDC supply. Approximately 6 mA of current flows out of each input during contact closure

The outputs of the DIO boards use 2803 current sinking (default) type IC’s. The output IC’s are installed in sockets to allow replacing the output IC only rather than the board if the IC is damaged.

The output IC’s can be replaced with 2981 type IC’s for current sourcing applications. Wire jumpers W1 through W4 must be relocated for current sourcing. In most cases, it is recommended the boards be returned to the factory for converting from current sinking (default) to current sourcing.

Appendix Table D-2: DIO Board Jumper Settings for Current Sourcing

JUMPERS				
CURRENT	W1	W2	W3	W4
Sinking (default)	“Yes”	“No”	“Yes”	“No”
Sourcing	“No”	“Yes”	“No”	“Yes”

D.2.1. 16 In/4 Out DIO Board Specifications

- (16) Programmable inputs

  See *Section D.1.1* specifications
- (4) Programmable outputs

  See *Section D.1.2* specifications
- Connector

  25 pin D connector (male). Connector is interchangeable with a 20 or 22 pin subminiature D connector dimensionally complying with MIL-C-24308.

D.2.2. 4 In/16 Out DIO Board Specifications

- (4) Programmable inputs

  See *Section D.1.1* specifications
- (16) Programmable outputs

  See *Section D.1.2* specifications
- Connector

  25 pin D connector (female). Connector is interchangeable with a 20 or 22 pin subminiature D connector dimensionally complying with MIL-C-24308.

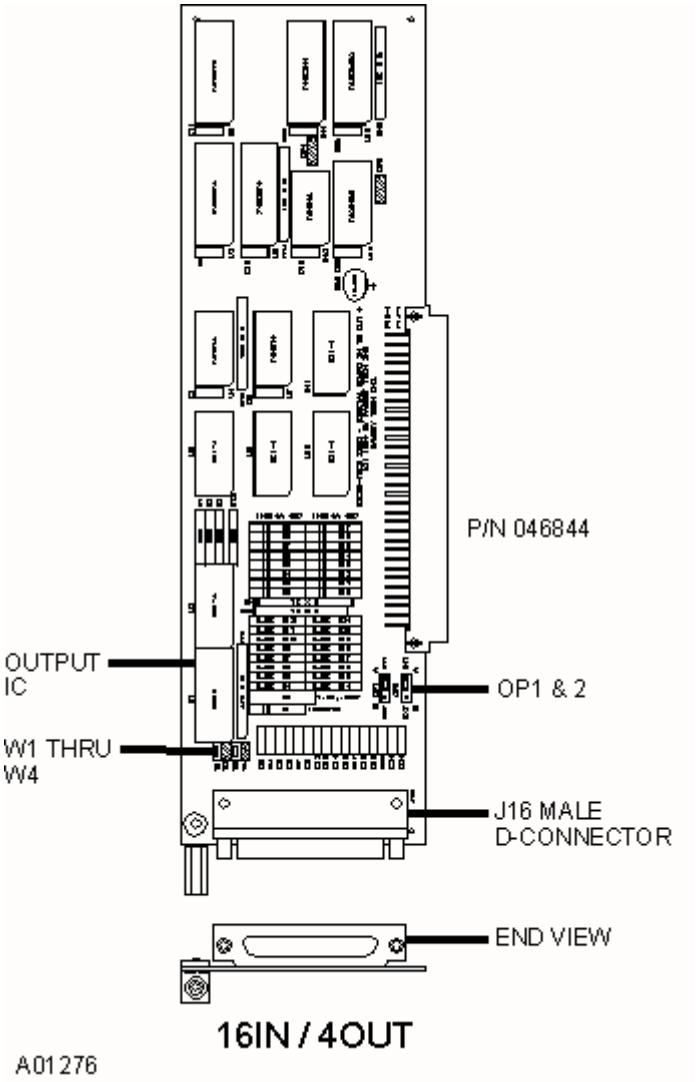
P/N 046844
OUTPUT IC
OP1 & 2
W1 THRU W4
J16 MALE D-CONNECTOR
END VIEW
16IN / 4OUT
A01276

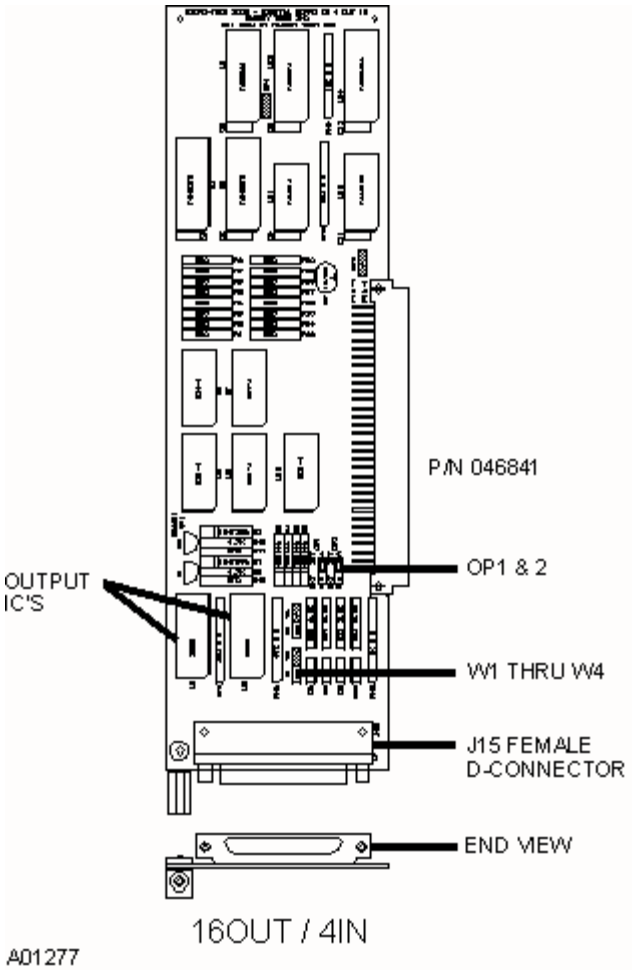
P/N 046841
OP1 & 2
OUTPUT
IC'S
W1 THRU W4
J15 FEMALE
D-CONNECTOR
END VIEW
16OUT / 4IN
A01277

Appendix Figure D-4: Digital Inputs/Outputs

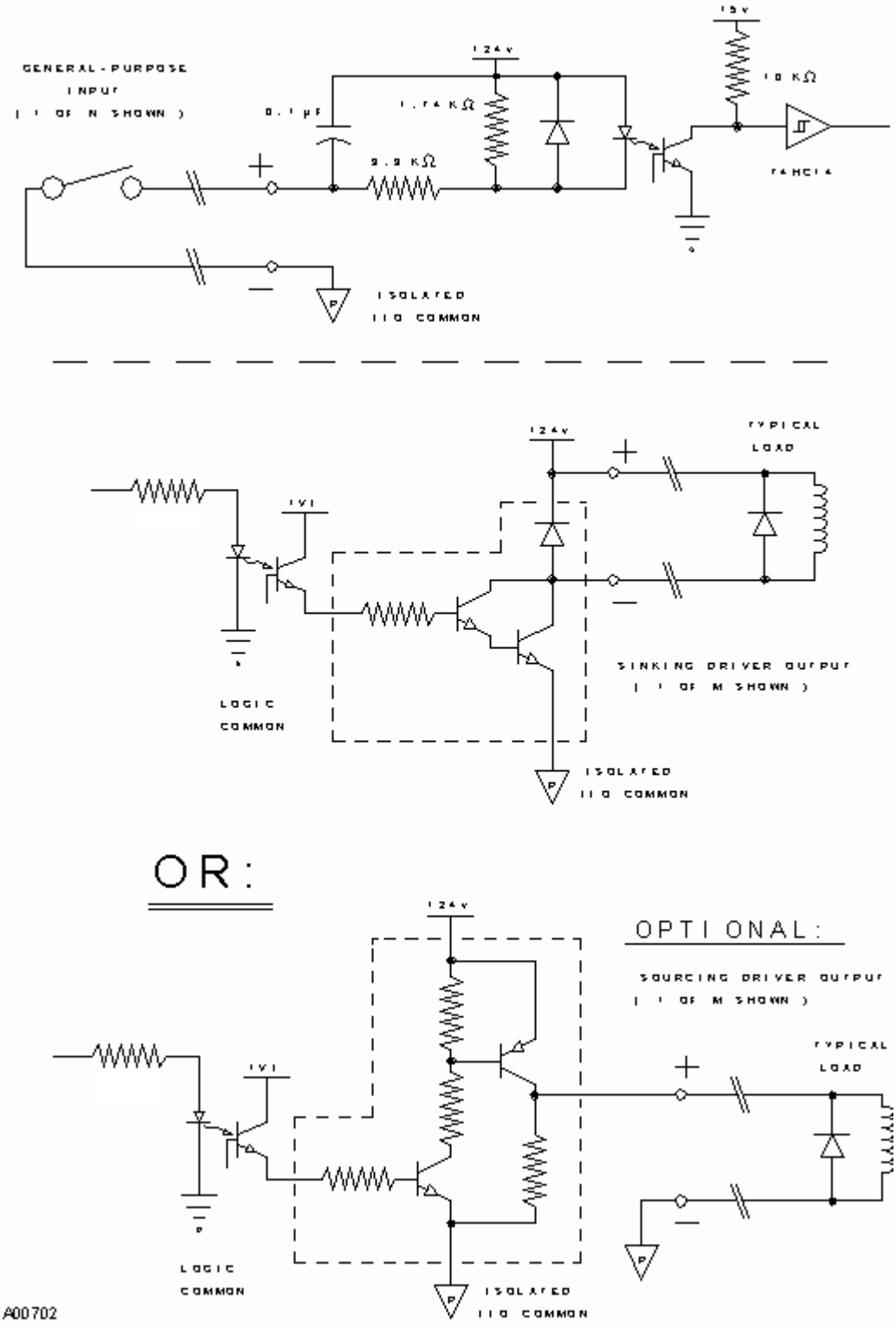

D.3. BCD Input Option

BCD can remotely enter load sizes for load out or batching applications. An optional Load Out input board is required. See Appendix Figure D-5 for wiring instructions.

Appendix Figure D-5: BCD Input Option Wiring

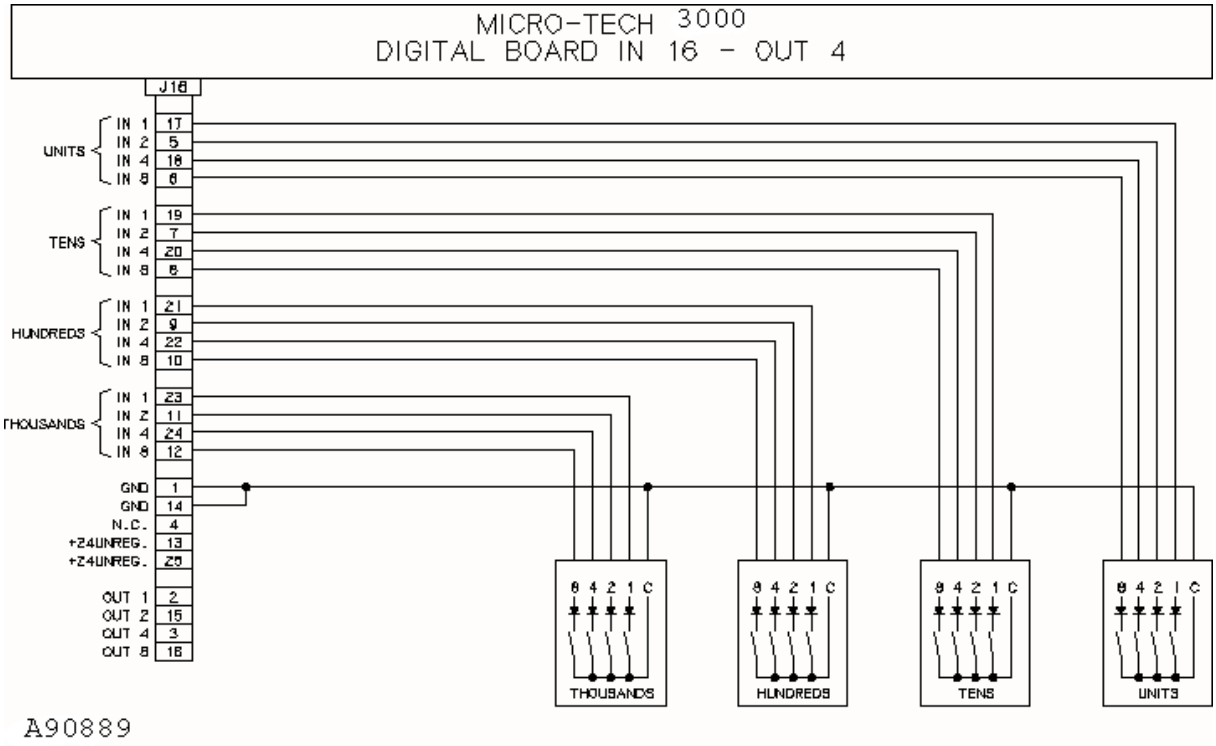

D.4. Analog I/O Boards

The analog I/O board is available in two configurations described below. *Type A* (option) has one current output only, whereas, *Type B* has two voltage inputs and two current outputs. The Micro-Tech 3104 can support up to four analog inputs and four analog outputs.

Type A: Current Output Board is a user definable 0-24/4-20 or 20-4/20-0 mA output (*Appendix figure D-7*).

Rate

Speed, or

Load

Optically isolated

Isolated power source

Voltage output by adding an internal dropping resistor

Output range:	User selectable 0-20mA or 4-20 mA, representing 0 to 100% variable.
Resistive load:	800 ohms max.
Capacitive load:	No limit
Field wiring:	Connections are made to the terminal strip on bottom edge of the analog board. Note that connector is removable for ease of termination.

Appendix Figure D-6: Current Output

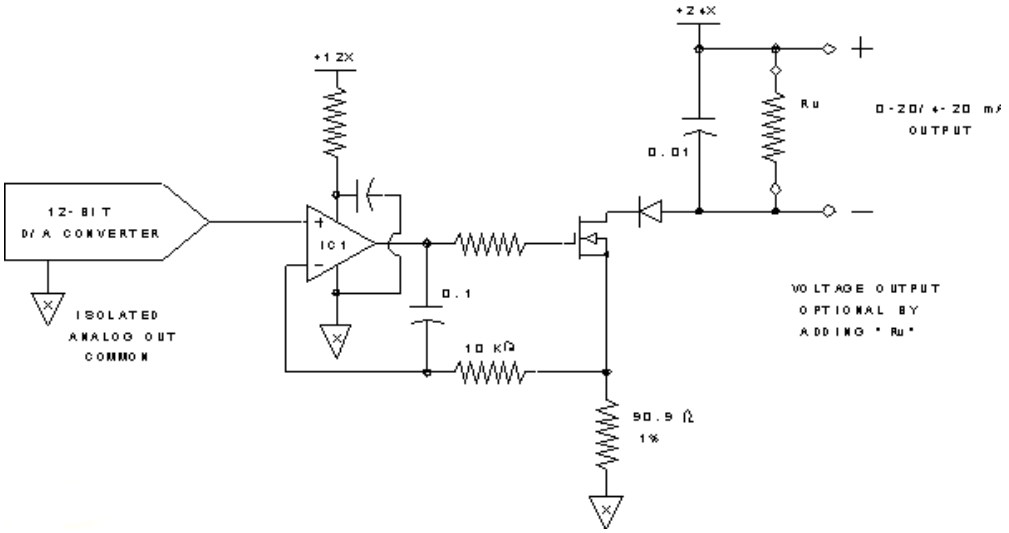

A00701

Appendix Figure D-7: Current Output PC Board (Type A)

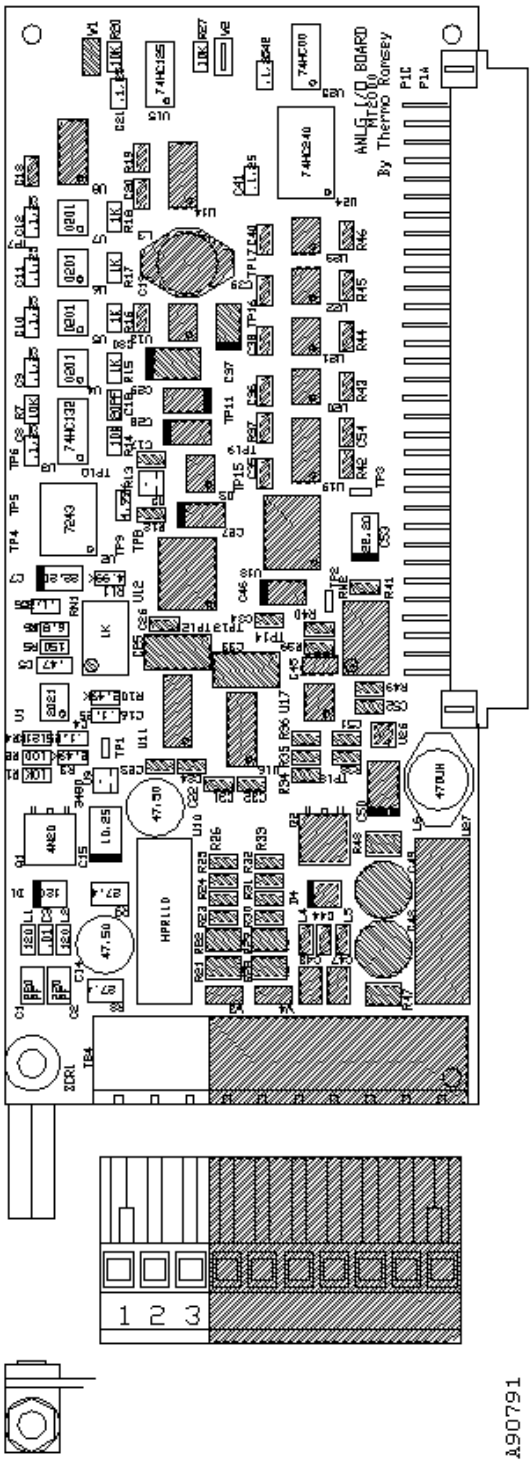

Appendix Figure D-8: Current Output Board Wiring Diagram (Type A)

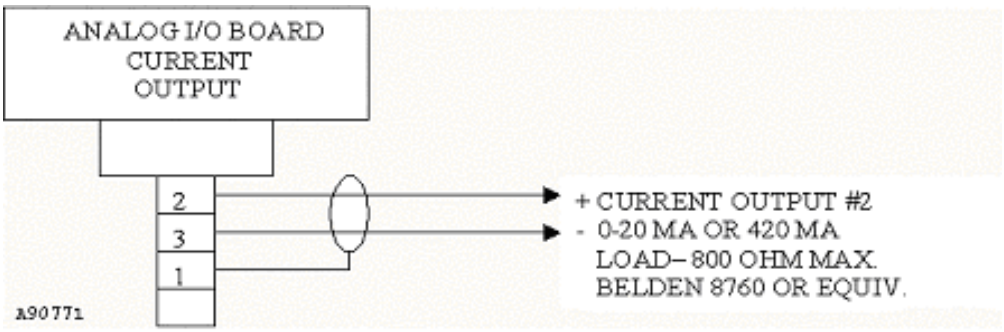

Type B: Analog Input/Output board has two ±5 VDC differential inputs (Appendix Figure D-9) and two user definable 0-20/4-20 or 20-4/20-0 mA outputs (Appendix Figure D-6).

Inputs

None

Setpoint (S.P.)

Moisture Compensation

Outputs

None

Weight

Rate, or

Control

Analog inputs are +/-5 VDC. Jumpers W3 and/or W4 are used to select 240 ohm impedance for 0-20/4-20 mA inputs (see *Appendix Figure D-10*).

Type:	Differential voltage input (0-20 mA or 4-20 mA with internal resistor, jumper selectable)
Range:	0-5 volt, or ±5 volt, programmable
Input impedance:	100 k nominal (differential)
Maximum usable input voltage:	106% of full scale
Non-isolated	
Max. non-destructive input voltage:	12 V peak

Field wiring: Connections are made to the terminal strip on bottom edge of the analog board. Note that connector is removable for ease of termination.

Appendix Figure D-9: Analog Input

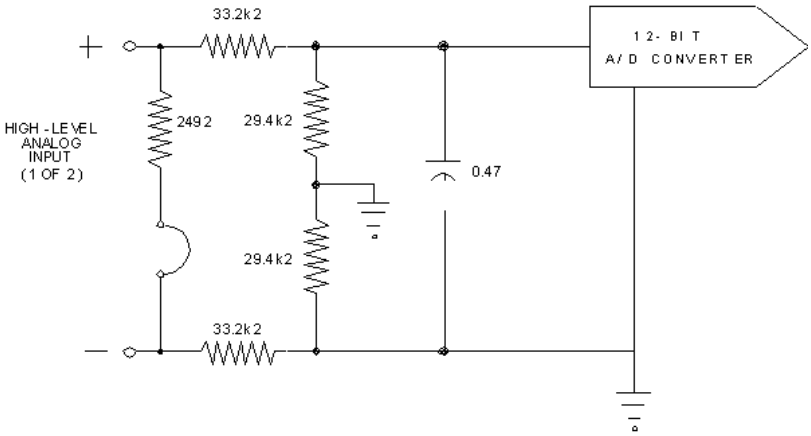

A00922a

2 current outputs (see Appendix Figure D-6). Same as described in Type A board

Appendix Figure D-10: Analog I/O PC Board (Type B)

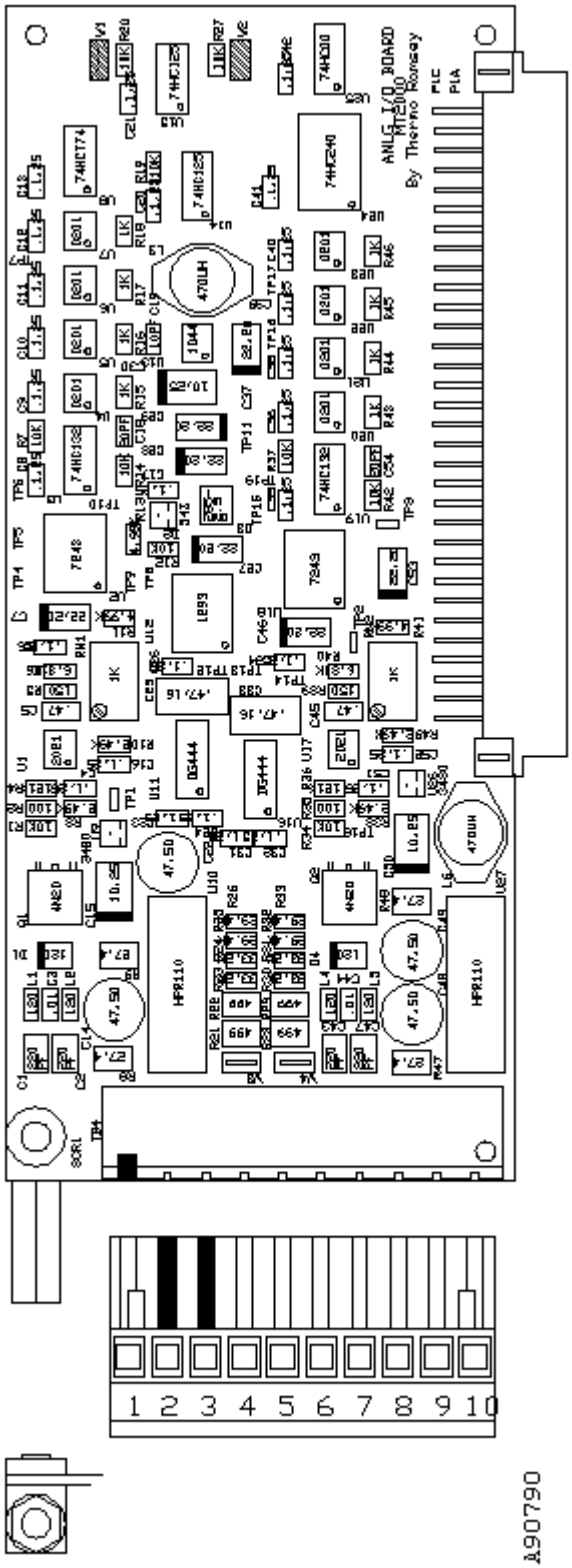

D.5. Load Out Option

If your *Micro-Tech 3104* is equipped with the *Load Out Option*, Refer to *REC 3910*

D.5.1. Load Out (Optional)

The load out option includes additional hardware designed to make the *Loss-in- Weight Controller* control a batch sequence. Once the system has been set up, the operator enters the load size and gives the start command. The *Loss-in-Weight Controller* then controls all functions.

START and **STOP** keys on the front panel are only operable if the load out option is installed.

The pre-feeder is stopped when the totalized value equals the batch set value minus the overflow correction value.

The **start/stop** commands can be provided by external signals (manual pushbutton or relay contact from an automatic system). The stop signal is used only in an emergency to abort the cycle before it ends.

Load sizing can be changed remotely via BCD input or the Comm.

D.6. Communications Options

The following table gives references for specific communications options.

Appendix Table D-3: Communications Options Reference

Part Number	Reference Manual	REC Number
068053	Standard Comm A Board	REC 3949
055517	Allen Bradley RIO	REC 4012
056713	Profibus-DP	REC 4063
068147	DeviceNet	REC 4150

D.6.1. Standard Comm A Board

Refer to *REC 3949* if the optional communication board is installed.

D.6.2. Allen-Bradley Remote I/O

Refer to *Allen-Bradley Remote I/O, REC 4012* if this option is installed.

D.6.3. Profibus-DP

Refer to *Profibus-DP, REC 4063* if this option is installed.

D.6.4. DeviceNet

Refer to *REC 4150* if this option is installed.

Appendix E
Optional Documentation

This appendix contains references to documents that may be useful for installation and operation of your *Micro-Tech 3104*.

- *REC3952d – Micro-Tech 2105 Belt Loss-in-weight controller – Serial Communications*
- *REC4015e – Micro-Tech 2000 Belt Loss-in-weight controller Model 2105 & 2305 Allen/Bradley Remote Installation/Operation*
- *REC4066d - PROFIBUS-DP Slave Protocol Micro-Tech 2000 Belt Loss-in-weight controller Model 2105/2305*
- *REC 4153a - DeviceNet Comms Manual MT 2000 Integrators, Model 2105*
- *REC 3910b – Micro-Tech 2000 Model 2101 Integrated Load Out*

****

THIS PAGE LEFT BLANK INTENTIONALLY

****

Appendix F
Engineering Drawings

- *Field Wiring Diagram Loss-in-Weight Controller – Micro-Tech 3104 – D07361F-E001*
- *Loss-in-Weight System 3104 Integrator – D07361F-Y001*

****

THIS PAGE LEFT BLANK INTENTIONALLY

****

Appendix G
Available Analog I/O and A/D Configuration – Micro-Tech 3000 Series

N°1 Out on Mother Board

N°1 Out on Current Out Board (Type A)

N°2 Out N°2 In on Analog I/O Board (Type B)

Appendix Table G-1

Mod.3101/3102/3104/3105/3107					
Analog Out				Analog In	
# 1	# 2	# 3	# 4	# 1	# 2
On Mother Board	Out 1 1st Board (Type B)	Out 2	Out 1 2nd Board (Type B)	In 1 Board (Type B)	In 2
On Mother Board	Out 1 Board (Type B)	Out 2	Out Board (Type A)	In 1 Board (Type B)	In 2
On Mother Board	Out 1st Board (Type A)	Out 2nd Board (Type A)	Out 3rd Board (Type A)		

Mod.3100				
Analog Out				Analog In
# 1	# 2	# 3	# 4	# 1
On Mother Board	Out 1 1st Board (Type B)	Out 2	Out 1 2nd Board (Type B)	In 1 Board (Type B)
On Mother Board	Out 1 Board (Type B)	Out 2	Out Board (Type A)	In 1 Board (Type B)
On Mother Board	Out 1st Board (Type A)	Out 2nd Board (Type A)	Out 3rd Board (Type A)	

Mod.3106					
Analog Out				Analog In	
# 1	# 2		# 4	# 1	# 2
On Mother Board	Out 1 Board (Type B)			In 1 Board (Type B)	In 2
On	Out				

Mother Board	Board (Type A)			

G.1. Available A/D Configuration on Micro-Tech 3000

N°1 A/D Input on Mother Board

N°1 A/D Input on A/D Board (1 Channel)

N°2 A/D Input on A/D Board (2 Channel) (Sensing available only on 1 Channel)

SLOT READY SEQUENCY

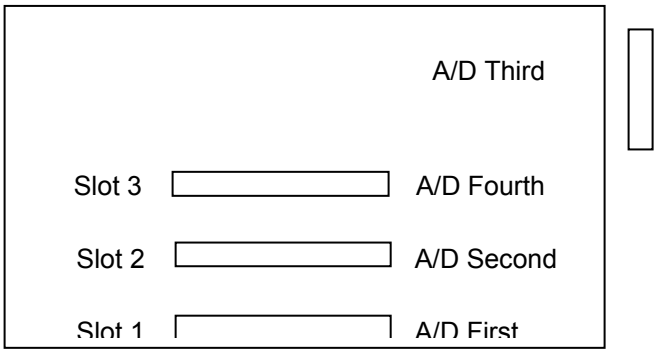

The program reads in this sequence:

- First the A/D channel(s) on Slot 1
- Second A/D channel(s) on Slot 2
- Third A/D channel on Motherboard
- Fourth A/D channel(s) on Slot 3

NOTES:

5. YOU CANNOT INSERT 1 CHANNEL A/D BOARDS IF A 2 CHANNEL A/D BOARD IS PRESENT.
6. 1 CHANNEL A/D BOARDS CAN BE INSERTED INTO ANY SLOT
7. 2 CHANNEL A/D BOARD (S) MUST BE INSERTED **ONLY** IN SLOT 1 OR 2.

Mod.3100 – Mod.3102 A/D INPUT			
# 1	# 2	# 3	# 4
In1 A/D Board (1ch.) Slot 1	In1 A/D Board (1ch.) Slot 2	A/D In on Motherboard	In1 A/D Board (1ch.) Slot 3
In1 In2 First A/D Board (2Ch.) Slot 1		In1 In2 Second A/D Board (2Ch.) Slot 2	
In1 In2 A/D Board (2Ch.) Slot 1 or 2		A/D In on Motherboard	Not Available

Mod.3104 A/D INPUT	
# 1	# 2
In1 A/D Board (1ch.) Slot 1 or 2 If in Slot 3 In #2	A/D In on Motherboard In #1 if A/D Board in Slot 3
In1 A/D Board (2ch.) Slot 1 or 2 The program recognize A/D Board (2ch.) as A/D Board (1ch.)	A/D In on Motherboard

Mod.3101 / Mod.3105 A/D INPUT
1
A/D In on Motherboard
In1 A/D Board (1ch.) Slot 1 or 2
In1 A/D Board (2ch.) Slot 1 or 2 The program recognize A/D Board (2ch.) as A/D Board (1ch.)

LOSS IN WEIGHT MOD.3104 P/F

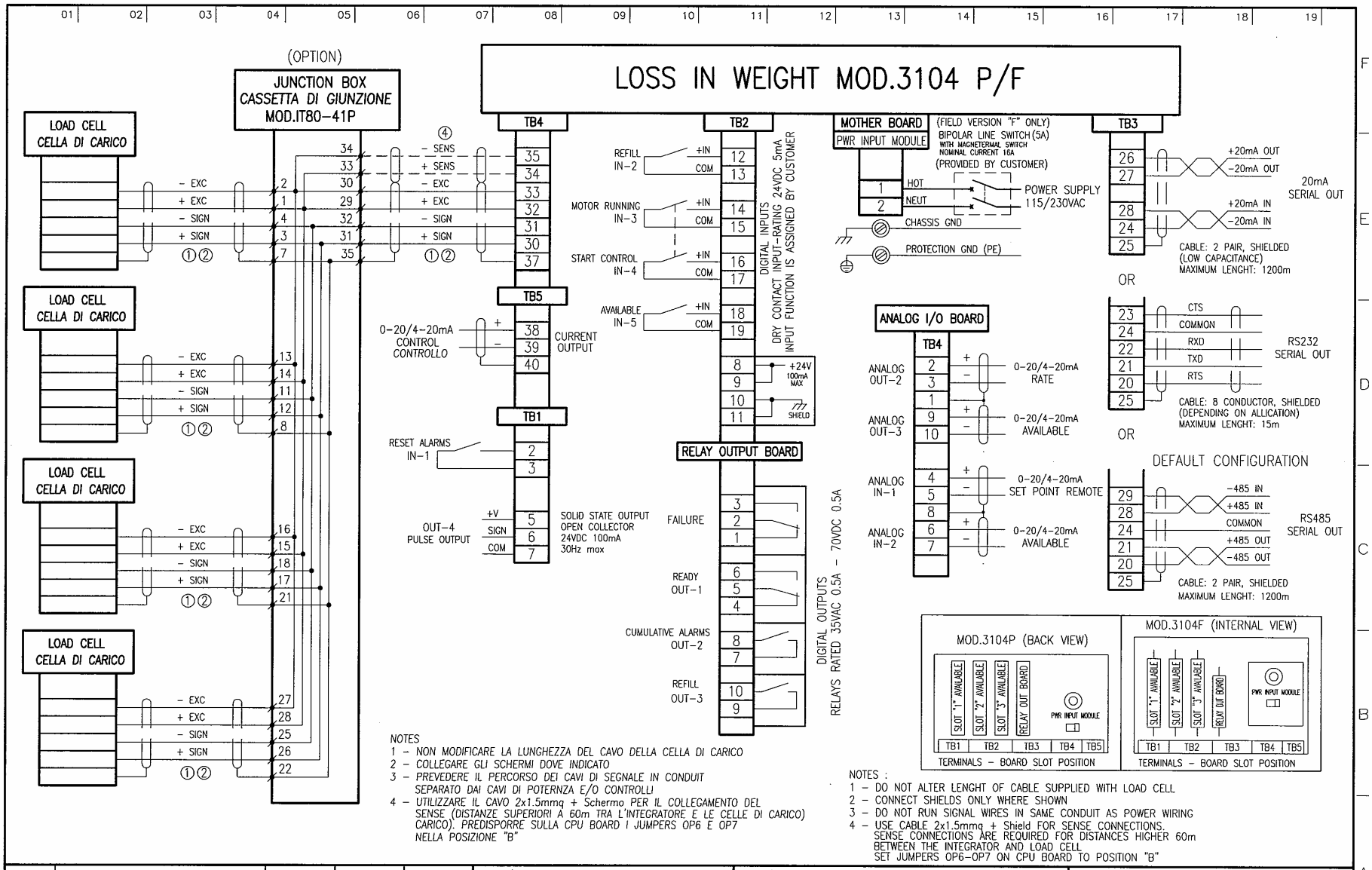

NOTES
1 - NON MODIFICARE LA LUNGHEZZA DEL CAVO DELLA CELLA DI CARICO
2 - COLLEGARE GLI SCHERMI DOVE INDICATO
3 - PREVEDERE IL PERCORSO DEI CAVI DI SEGNALE IN CONDUIT SEPARATO DAI CAVI DI POTERNZA E/O CONTROLLI
4 - UTILIZZARE IL CAVO 2x1.5mmq + Schermo PER IL COLLEGAMENTO DEL SENSE (DISTANZE SUPERIORI A 60m TRA L'INTEGRATORE E LE CELLE DI CARICO) CARICO). PREDISPORRE SULLA CPU BOARD I JUMPERS OP6 E OP7 NELLA POSIZIONE "B"

NOTES :
1 - DO NOT ALTER LENGHT OF CABLE SUPPLIED WITH LOAD CELL
2 - CONNECT SHIELDS ONLY WHERE SHOWN
3 - DO NOT RUN SIGNAL WIRES IN SAME CONDUIT AS POWER WIRING
4 - USE CABLE 2x1.5mmq + Shield FOR SENSE CONNECTIONS. SENSE CONNECTIONS ARE REQUIRED FOR DISTANCES HIGHER 60m BETWEEN THE INTEGRATOR AND LOAD CELL SET JUMPERS OP6-OP7 ON CPU BOARD TO POSITION "B"

REV.	DESCRIZIONE / DESCRIPTION	DATA / DATE	COMP / BY	VISTO / CHECK
B	MODIFIED	12-11-2003	D.C.	
A	ISSUED	9-7-2003	D.C.	

CLIENTE / CUSTOMER

DATA / DATE

FILE N° MT-0003104-E001B

TITOLO / TITLE

LOSS IN WEIGHT MOD.3104 P/F
WIRING DIAGRAM
SCHEMA INTERCONN. MORSETTIERE

Thermo ELECTRON CORPORATION
Thermo Ramsey Italia S.r.l. - Strada Rivoltana Km6/7 Rodano (MI)

DISEGNO N° / DRAWING N° MT-0003104-E001B
FOGLIO / SHEET 001
CONTINUA / CONT.D ON —