Micro-Tech 2000

Model 2001 Integrator

User Guide

REC-3901 Rev J / Part No. 049370

Revision History

Revision Number	Date Revised	ECO Number	Revision Specifics
Revision A	February 1996		
Revision B	July 1996		
Revision C	April 1997		
Revision D	April 1998		
Revision E	October 1998		
Revision F	February 2000		Revision 33.00.03.05 Software
Revision G	November 2002		Revision 33.15.00.00 Software
Revision H	February 2007	1102	Edit mounting and installation
Revision J	February 2011	2170	Corrections & Branding

MT2001

MINOR CALIBRATION

1)Run Belt Empty During Zero & Span Calibration.
2)Always Perform a Zero Calibration Prior to a Span Calibration.

3)Record Percent Error End of Sect 3.0

4)Record Old and New Zero & Span Numbers Step 4.0

=Zero Calibration=

Step	Function	Display
1.0	Press **MENU**	MAIN MENU 1
2.0	Press **ZERO CAL**	ZERO CAL
3.0	Press **START**	AUTO ZEROING

=Time Remaining Counts Down to Zero
When Zero
Upper Display Auto Zero Complete
"Complete" Flashing

4.0	Press **YES**	
5.0	Press **RUN**	

= ZERO CALIBRATION COMPLETE =

=Span Calibration=

Step	Function	Display
1.0	Press **MENU**	MAIN MENU 1
2.0	Press **SPAN CAL**	AUTO PAN R CAL
3.0	Press **START**	AUTO SPANNING

=Time Remaining Counts Down
When Zero
Upper display Auto Span Complete
"Complete" flashing

4.0	Press **YES**	
5.0	Press **RUN**	

= SPAN CALIBRATION COMPLETE =

To abort during zero or span calibration press RUN

©2006 *Thermo Fisher Scientific*. All rights reserved.

This document is confidential and is the property of *Thermo Fisher Scientific*. It may not be copied or reproduced in any way without the express written consent of *Thermo Fisher Scientific*. This document also is an unpublished work of *Thermo Fisher Scientific*. *Thermo Fisher Scientific* intends to, and is maintaining the work as confidential information. *Thermo Fisher Scientific* also may seek to protect this work as an unpublished copyright. In the event of either inadvertent or deliberate publication, *Thermo Fisher Scientific* intends to enforce its rights to this work under the copyright laws as a published work. Those having access to this work may not copy, use, or disclose the information in this work unless expressly authorized by *Thermo Fisher Scientific*.

Disclaimer

Though the information provided herein is believed to be accurate, be advised that the information contained herein is not a guarantee for satisfactory results. Specifically, this information is neither a warranty nor guarantee, expressed or implied, regarding performance, merchantability, fitness, or any other matter with respect to the products, and recommendation for use of the product/process information in conflict with any patent. Please note that *Thermo Fisher Scientific* reserves the right to change and/or improve the product design and specifications without notice

TABLE OF CONTENTS

CHAPTER 1 INTRODUCTION....1-1

Application 1-1
Main Features 1-1
Integrator Configuration 1-2
Integrator General Description 1-2
Measuring Functions 1-3
Monitoring Functions 1-3
Print Functions 1-4
Communications (Optional) 1-4
Functional Description 1-5
Measuring Functions 1-5
Load Out (Optional) 1-8
Monitoring Functions 1-8
Unpacking and Inspection 1-8
Storage 1-8
Symbol Identification 1-9
Specifications 1-9

CHAPTER 2 INSTALLATION....2-1

Installation 2-1
Mounting 2-2
Safety Precautions 2-3
Utility Connections (Incoming Power) 2-4
Wiring 2-6
Integrator Configuration 2-7
Mother Board Configuration Jumpers and Switches 2-7
Initial Setup Procedures 2-16
Determining Installation Parameters 2-16
Programming the Micro-Tech 2001 Integrator 2-25

CHAPTER 3 OPERATION....3-1

Front Panel 3-1
LED Status Indicators 3-2
Display 3-3
Menu Displays 3-3
Normal Power On 3-4
Hardware Configuration 3-4
Run Menu 3-5
Main Run 3-5
Reset Total 3-6
Material Calibration 3-7
Alarm Pending 3-7

Total Key *3-9*
Start-Stop Keys *3-10*
CALIBRATION 3-10
Zero Calibrate Scroll *3-10*
Span Calibration Scroll *3-13*
Material Span Calibration *3-21*
PERMANENT SCROLL RECORD – SETUP SCROLLS 3-26
PERMANENT FIELD RECORD 3-33
CALIBRATION REPORT 3-34

CHAPTER 4 MAINTENANCE 4-1

FREQUENT CHECKPOINTS 4-1
TROUBLESHOOTING 4-2
Alarm Message *4-2*
Alarms List *4-2*
Cold Start *4-7*
Internal Test Procedure *4-9*
Load Call Excitation and Signal Voltage *4-9*
Resetting Master Total Procedure *4-10*
Remove a Forgotten Password *4-11*
LITHIUM BATTERY REPLACEMENT 4-11
DISPOSAL OF HAZARDOUS WASTE 4-12
CLEANING INSTRUCTIONS 4-12

CHAPTER 5 SERVICE, REPAIR AND REPLACEMENT PARTS 5-1

PARTS ORDERING INFORMATION 5-1
PHONE/FAX CONTACTS FOR THERMO FISHER SCIENTIFIC OFFICES 5-3
PARTS LIST 5-4
DISPOSAL OF HAZARDOUS WASTE 5-4

APPENDIX A WEIGHBRIDGE PHYSICAL PARAMETERS A-1

RULES FOR ENTERING THE PARAMETERS A-4
TABLES FOR THERMO WEIGHBRIDGES A-5

APPENDIX B LINEARIZATION B-1

APPENDIX C MICRO-TECH 2000 MODEL 2001 INTEGRATOR C-1

MENU DISPLAY C-1
CALIBRATION C-2
Zero Calibrate Scroll *C-3*
Span Calibration Scroll *C-5*
Material Span Calibration *C-13*
MAIN MENU 2 ..... C-17
Display *C-18*
Scale Data *C-23*
Calibration Data *C-36*
MAIN MENU 3 ..... C-51

Changing the Protection Level *C-52*
Diagnostics *C-54*
Tests *C-61*
MAIN MENU 4 ..... C-67
I/O Definition *C-67*
Alarms Definition *C-79*
MAIN MENU 5 ..... C-84
Communication A Scroll *C-84*
Print *C-90*
The PRINT Key *C-102*
MAIN MENU 6 ..... C-104

APPENDIX D LOADOUT D-1

APPENDIX E MT2001 MULTI-POINT CALIBRATION E-1

DEFINE NUMBER OF CALIBRATION POINTS E-1
Selection of Calibration Point *E-2*
Front Panel Keyboard *E-2*
Digital Input Selection *E-2*
Linearization *E-2*

LIST OF TABLES

Table 1 1. Symbol Identification 1-9
Table A- 1. Weighbridge Physical Parameters A-2
Table A- 2. Rules for Entering the Parameters A-4
Table A- 3. Thermo Scientific Weighbridges A-5

LIST OF FIGURES

Figure 1 1. Speed Sensor Input 1-12
Figure 1 2. AC Input Module 1-13
Figure 1 3. DC Input Module 1-14
Figure 1 4. AC Output Module 1-15
Figure 1 5. DC Output Module 1-15
Figure 1 6. High-Level Analog Output 1-16
Figure 1 7. High-Level Analog Input 1-17
Figure 2 1. Typical Micro-Tech 2001 Installation 2-1
Figure 2 2. Outline and Mounting Dimensions Micro-Tech 2000 - Model 2001 Integrator 2-2
Figure 2 3. Field Wiring Diagram 2-5
Figure 2 4. Model 2001 Mother Board 2-8
Figure 2 5. Field Wiring Connections 2-12
Figure 2 6. Analog I/O Board 2-13
Figure 2 7. Field Wiring Connections 2-14

Figure 2 8. Field Wiring Connections....2-15
Figure 2 9. Belt Scale Weighbridge....2-17
Figure 2 10. Pivot to Load Cell....2-18
Figure 2 11. Pivot to 1st Idler....2-19
Figure 2 12. Pivot to 2nd Weigh Idler....2-19
Figure 2 13. Pivot to 1st, 2nd, 3rd and 4th Idler....2-20
Figure 2 14. Pivot to Test Weight Height....2-21
Figure 2 15. Pivot to Test Weight Length....2-21
Figure 2 16. Pivot to Carriage Height....2-22
Figure 2 17. Roll to Carriage Height....2-22
Figure 2 18. Measuring Angle of Incline....2-24
Figure 2 19. Micro-Tech 2001 CPU Board....2-25
Figure 3 1. Model 2001 Integrator Front Panel....3-2
Figure 4 1. Model 2001 Mother Board....4-13
Figure A- 1. Typical Weighbridges....A-3

Chapter 1 Introduction

This instruction manual contains information on the installation, operation, calibration, and maintenance of the Micro-Tech 2000 Model 2001 Field Mount Integrator.

Application

The Micro-Tech 2001 Field Mount Integrator is a micro-computer driven instrument used for deriving rate and quantity of flowing material from signals representing the weight of a segment (pounds/foot) of moving material and its velocity (feet/minute).

By suitable processing of these two input signals, the Integrator delivers visible and electrical output representing the rate of material movement and visible and electrical output representing total amount of material which has passed the weighbridge.

For remote indicating, four options are available:

1. **Remote totalization**
2. **Remote flow rate, belt loading or belt speed**
3. **Communications**
4. **Field Bus**

The Integrator has provisions for two programmable logical inputs, three programmable logical outputs, and one fault output.

Many automatic and check functions are available to the operator for calibration and maintenance.

Main Features

The Model 2001 integrator has many hardware and software features necessary for continuous weighing and outputting totalized weight and rate information. The following main features are listed below. Other features are listed in specific sections of this manual.

- Menu driven scroll entries on a four line display
- Five LED status indicators

- Visible and electrical outputs representing rate or load of the material movement
- Visible and electrical output representing total amount of material that has passed the weighbridge
- Automatic zero and span calibration
- Auto zero tracking
- Several software options that may be turned on by keyboard entry or by installing optional plug-in PC boards
- Optocoupled digital inputs and outputs
- Alarms and failure detection
- Communication standards: RS232C, RS485 networking and multidrop, 20 mA current loop passive
- Allen-Bradley remote I/O
- PROFIBUS-DP

Integrator Configuration

The standard configuration of the integrator includes one single channel current output board and one remote total pulse output module.

- One more circuit board expansion slot is available. The following boards can be inserted if the need arises.
- Dual channel current output, analog input board
- Loadout board
- Serial communication board
- Allen-Bradley remote I/O board
- PROFIBUS-DP board

Integrator General Description

The integrator has been designed for belt scales, and is capable of performing all the necessary measuring functions.

All the required functions are resident in the software of the microprocessor. Optional functions are automatically turned on when the relevant hardware is installed, or after the operator has selected them through keyboard. In all cases, there is no need for special software to be created.

Although the program of the Micro-Tech 2001 is complex, the set up of the instrument is very easy. It is performed by entering parameters through the keyboard following the

guidelines of comprehensive messages appearing on the four line display.

The set up parameters may be divided into the following main groups:

- Measuring
- Monitoring
- Printing
- Communication

Measuring Functions

The integrator can be directly connected up to six 350 ohm load cells and receives the signal of a speed sensor in order to calculate belt speed, belt loading and feed rate.

Rate is integrated in time to calculate the amount of material conveyed by the belt (total), and is displayed in three individual registers: total, reset total, operator total.

The integrator can perform automatic zero and span calibrations. When the belt is running and the rate is below a certain percentage, the integrator can perform auto zero tracking, to minimize the error of zero due to material and dust.

Analog (current) output signals can be generated to transmit rate, speed or belt loading to other control devices.

Frequency output signals can be generated to transmit flow rate, belt speed or belt load to other devices (requires special software).

Displayed variables and analog outputs can be smoothed via damping filters, individually programmable.

Monitoring Functions

The integrator includes the internal diagnostic that will generate alarms in case of hardware failures or programming errors. The following process alarms are also provided:

- Alarms for high and low flow rate, speed and weight

Alarms are visible on the display and can be acknowledged and reset through keyboard, digital input or serial line. Alarms can be delayed to avoid intervention in case of short time peaks. Each individual alarm can be programmed to operate

as alarm, shut down or to be ignored. Two LED's indicate the cumulative status of alarms and shut-down. Digital outputs are also provided for the following:

- Hardware failure
- Alarm cumulative
- Shut down cumulative

Print Functions

Periodical and under command prints can be obtained by connecting a serial printer to an optional communication board. Time and date are permanently stored in memory and updated even in case of power loss. The entire set up of the instrument can also be printed out.

Communications (Optional)

1. Serial Communications

The communication protocol allows a remote intelligent device to read and eventually write the contents of the registers.

During the communication activity, the Micro-Tech 2001 always acts as a Slave, meaning it responds to a request from a Master device on the line, but never attempts to send messages out.

One electrical interface may be selected accessed through one communication port.

2. Field Bus I/O

Allen-Bradley Remote or PROFIBUS-DP I/O communication link board is typically used to transfer I/O images between a main PLC and remote devices (normally remote I/O racks - rack adapters) or to transfer (read and write blocks of data with intelligent remote devices (node adapters). The Micro-Tech 2001 in this case.

The Remote I/O is a typical master/slave communication where the main PLC is the master or scanner and the remote devices are slaves or adapters.

Functional Description

Measuring Functions

1. Instantaneous Flow Rate Calculation

   The signal delivered by the load cell(s), which represents the weight per unit length of the belt (lbs/ft), is multiplied by the signal delivered by the speed transmitter which represents the belt speed (ft/min). The result of this operation is the instantaneous flow rate (lbs/ft x ft/min = lbs/min) which is then multiplied by suitable constant to obtain the value in the required engineering units (kg/h, ton/h, etc). An adjustable damping filter is provided separately for displayed rate and current outputs.

2. Flow Totalization

   The total is accumulated by multiplying mass per unit length by incremental length and totalizing the result in engineering units.

   Three totalizing memories are provided:

   - The first memory (Master total) cannot be reset to guarantee that the data is not lost because of an unwanted reset.
   - The second and third memories (Reset and Operator total) can be reset by the operator and normally used for shift or daily totalization.

3. Zero and Span Automatic Calibrations

   Zero and span calibrations are based on belt length defined by a number of belt revolutions.

   To calculate the exact number of revolutions, the instrument counts the pulses delivered by the speed transmitter (one pulse represents a specific belt length); when the required number of pulses is reached, the instrument ends the calibration test, and compares the actual totalized value to the theoretical one (0 for zero calibration), and calculates the calibration constant.

The calibration constant is a calculated value that can be factored based on an actual material test.

- Electronic Calibration (R-Cal)

  Allows the operator to perform the calibration without the need of applying test weights or test chain on the weighbridge. The electronic calibration checks all the circuitry including the load cell, and is performed by unbalancing the load cell bridge using a precision resistor. The calibration constant is calculated on the basis of the load cell and the scale data.

- Test Weight Calibration

  Requires the positioning of test weights on the weighbridge.

- Chain Calibration

  Requires the application of calibrated chains on the belt. This method is the nearest to actual operating conditions.

- Material Test

  Is performed by running a known quantity of material on the scale and weighing that quantity on a static scale of known accuracy.

4. Multiple Calibration Points

   The instrument supports up to 10 different calibrations and linearizations for systems that use a reversing belt or have multiple feed points. The different calibration factors calculated compensate for variations in belt tension and effect on the conveyor belt scale due to the change in loading conditions.

   The operator can select which calibration to run by entering the calibration number on the keypad or by selecting it through input contacts. Internally, the instrument has 10 tables each for zero calibration, span calibration, and linearization. When one of them is selected, its values become active.

Refer to Appendix A/5 for information about enabling multiple calibrations and selecting calibration points.

5. Zero Tracking (AZT)

   Under a preset minimum flow rate when enabled, the instrument makes subsequent automatic zero calibrations with the following sequence:

   - waits for one-half time of the test duration (a solid "Z" will be displayed);
   - execution of a zero test (the "Z" will flash);
   - performs automatic zero for one test duration;
   - continuously repeats above zero calibration as long as feed rate remains below AZT preset value.

   Zero Tracking function is limited to a maximum value of "ZERO LIMIT" that is set in % in the SET UP Scroll.

   If the new zero calculated by autozero tracking function exceeds that value, an alarm is generated and the new zero is not installed. The reference value for zero is set every time an Auto Zero or Manual Zero is performed.

6. Current Output Signals

   The instrument is equipped with one current output signal (0-20/4-20 mA) that can be upgraded to two by adding one board. The choice of the signal type is made through the keyboard. Each current output may be programmed by keyboard to deliver one of the following signals:

   - flow rate
   - belt loading
   - belt speed

   Each output has its own adjustable damping and programmable time or length delay.

7. Frequency Output Signals

   If software version 33.15.xx.xx is installed in the Integrator one or two optional Frequency Outputs can be added. This output signal can be adjusted to provide 0 to 30000 Hz representing one of the following:

- flow rate
- belt loading
- belt speed

The output will be dampened at the same value as the display.

Load Out (Optional)

The load out option includes additional hardware designed to make the integrator control a batch sequence. Once the system has been set up, the operator enters the load size and gives the start command. All functions are then controlled by the integrator.

Start and Stop keys on the front panel are operable if the load out option is installed.

Monitoring Functions

The integrator is equipped with an indication system. Indication can be in the form of:

- status indications
- process alarms
- programming errors

Unpacking and Inspection

The Micro-Tech 2001 Integrator has been properly packaged for shipment and storage, when necessary. Refer to the appropriate manual in the Appendix for unpacking procedures for optional equipment.

Inspect all packages for damage before opening as oftentimes the carrier may be responsible for shipping damage. Refer to the appropriate manual in the Appendix for inspection procedures for optional equipment.

Storage

The Micro-Tech 2001 Integrator can be safely stored, with cover latches secured and hole plugs installed, between -40° to +158° F (-40° to +70° C). The units should be protected against moisture.

Symbol Identification

Table 1-1 describes the symbols used in this manual.

Table 1-1. Symbol Identification

Symbol	Description
	Alternating current
	Earth (ground) TERMINAL
	PROTECTIVE CONDUCTOR TERMINAL
	Caution, risk of electric shock
	Caution (refer to accompanying documents)

Specifications

Enclosure

Field Mount

NEMA 4X, dust and watertight
Size 15 x 13 x 7 inches
Fiberglass reinforced polyester molded blue
Door window UVA acrylic UL#E64358
Stainless steel "Quick" type latch
2 position mounting feet
Steel chassis providing EMI/RFI shielding
Provision for 6 solid-state input/output modules (4 output, 2 input)
Power on/off switch

Environmental Conditions

Mounting

Field Mount: (Indoor/Outdoor) Should be mounted as close to the load cells as possible and not exposed to excessive vibration, heat, or moisture.
Panel Mount: Control room environment and not exposed to excessive vibration or heat.

Temperature (Ambient)
Storage: -40° to +158° F (-40° to +70° C)
Operating: +14° to +122° F (-10° to +50° C)
Maximum relative humidity 80% for temperature up to 31 degree C decreasing linearly to 50% relative humidity at 40 degree C.
Pollution degree (pollution degree 2)
Altitude up to 6,561 ft. (2000 m)

Power Requirements

Nominal voltage
110/120/220/240 VAC, selectable

Nominal frequency
50/60 Hz

Operating range
Nominal voltage +10%, -15%
93.5 VAC - 121 VAC (110 VAC Nom.)
102.0 VAC - 132 VAC (120 VAC Nom.)
187.0 VAC - 242 VAC (220 VAC Nom.)
204.0 VAC - 264 VAC (240 VAC Nom.)

Fusing
1.0 Amp Slo-Blo 110/120 VAC, Type T
0.50 Amp Slo-Blo 220/240 VAC, Type T

Power Consumption
50 VA max.

Maximum non-destructive input voltage
150/300 VAC for 1 minute

Power Switch
Field mount w/field terminal board only: switches both L1 & L2.

Transient overvoltage
Installation category (Overvoltage Category II)

WARNING: DEVICE SHALL BE CONSIDERED PERMANENTLY CONNECTED. A READILY AVAILABLE DISCONNECT DEVICE MUST BE INCORPORATED IN THE FIXED WIRING.

Load Cell (Weight)

Load cell input circuits
Number: Up to six 350 ohm load cells in parallel. Cable distance 200 ft. or less
Sensitivity: 0.5 mV/V to 3.5 mV/V (keyboard selectable).
Input impedance:100 k_ minimum
Maximum usable signal:114% of 3 mV/V.
Displayed A/D counts for 3 mV/V: 112368
Isolation: Non-isolated
Maximum non-destructive input voltage ±6 V relative to ground
Transient/RFI protection: NO
Load cell cable shield: Connected to earth ground.

Load Cell Excitation Power Supply

10 VDC ±10%, 220 mA
Minimum load impedance (operating) 58 ohms
Output short circuit, 1.5 A maximum

Excitation-sense circuitry

6 Wire System. Cable distance over 200' (not to exceed 3000').
Nominal input voltage: ±5 VDC (10 volts)
Input impedance: 38 k_ minimum.
Jumper selectable: Local or remote sense.

Speed Input

High speed digital (DC) input

Speed sensor (Figure 1-1)

Comparator based input with hysteresis
Optically isolated
Built in current source for dry contact use
Powered by +20 V SPU supply

Type

Jumper selectable
Voltage/current or contact closure type sensor.
Compatible with all Thermo speed sensors.

Frequency range

Voltage/current type sensor: 0.25 to 2.0 kHz
Contact closure type sensor: 0.25 to 30 Hz
Low threshold: +1.0 VDC min
High threshold: +3.2 VDC max
Low or high pulse duration

Voltage/current type sensor

200 us minimum

Contact closure type sensor

15 ms minimum

Hysteresis

0.5 VDC minimum

Input impedance

10 k_ typical, 500 ohm minimum

Input source current

2 mA nom. at 0 VDC.

Maximum non-destructive input voltage:

±50 V peak, continuous.

Cable Length

1 mile, using 18 AWG shielded cable, Thermo series "60" speed sensors.

Figure 1-1. Speed Sensor Input

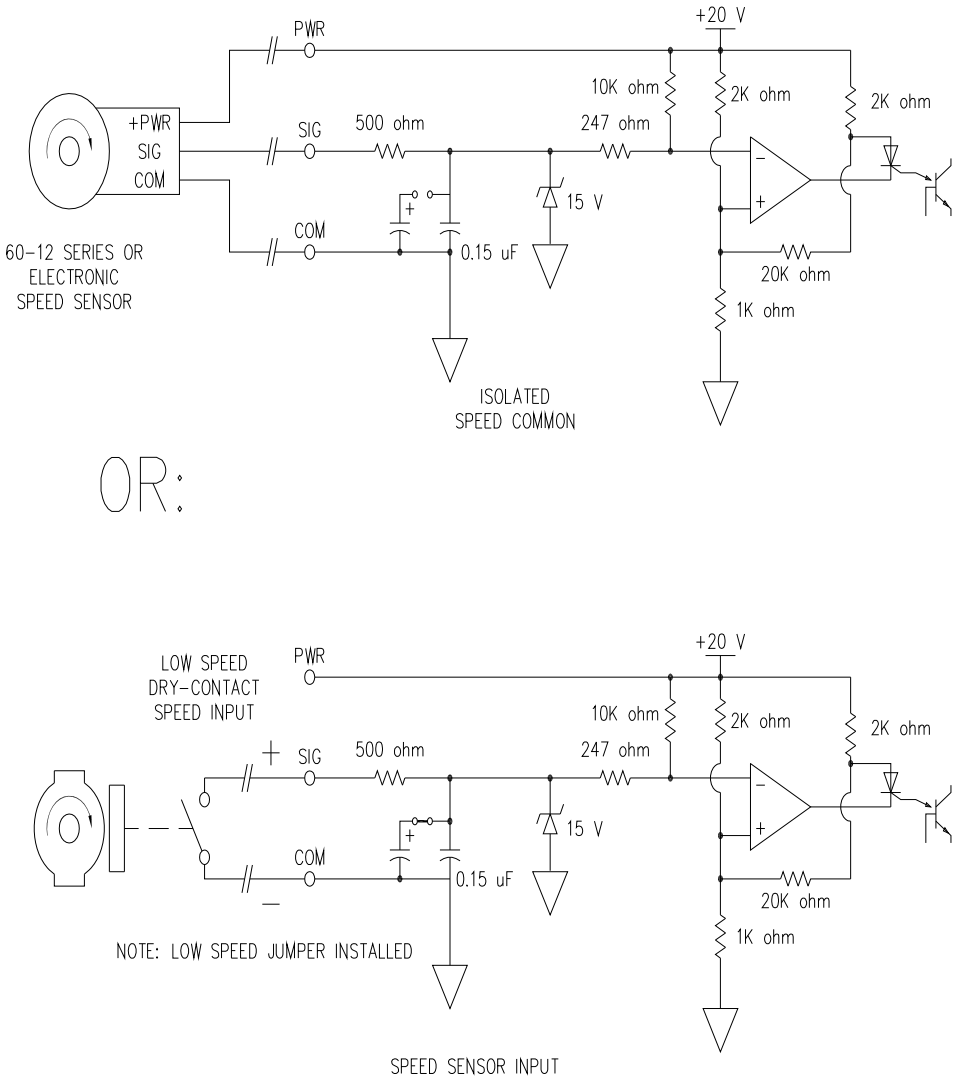

General Purpose Digital Inputs

There is provision on the mother board for two OPTO/22 Generation 4 modules.

(2) status general purpose user definable digital inputs (Figure 1-2 AC or Figure 1-3 DC)

Optically isolated, OPTO/22 Generation 4 series, 5 volt logic

Powered by external AC or DC source

Figure 1-2. AC Input Module

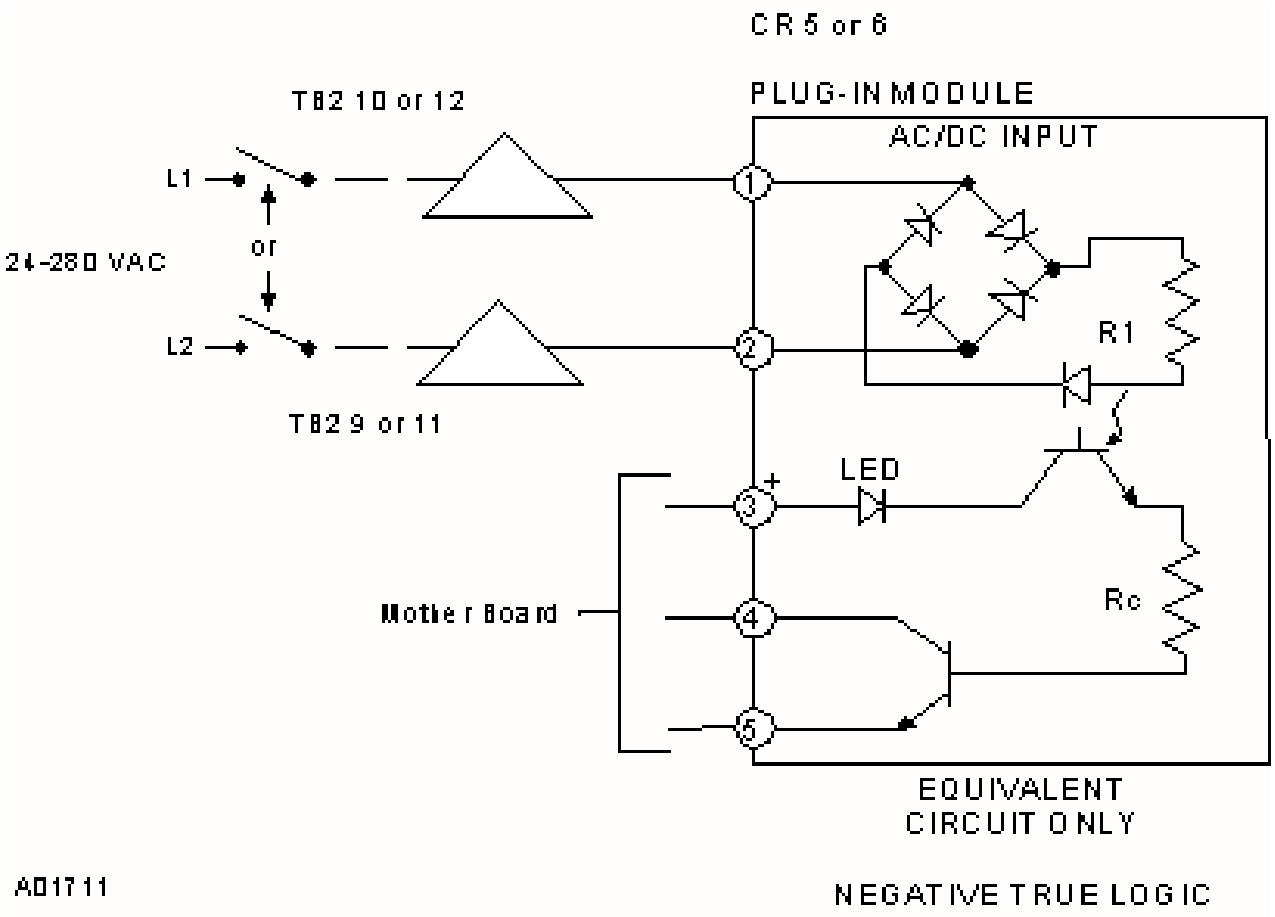

Figure 1-3. DC Input Module

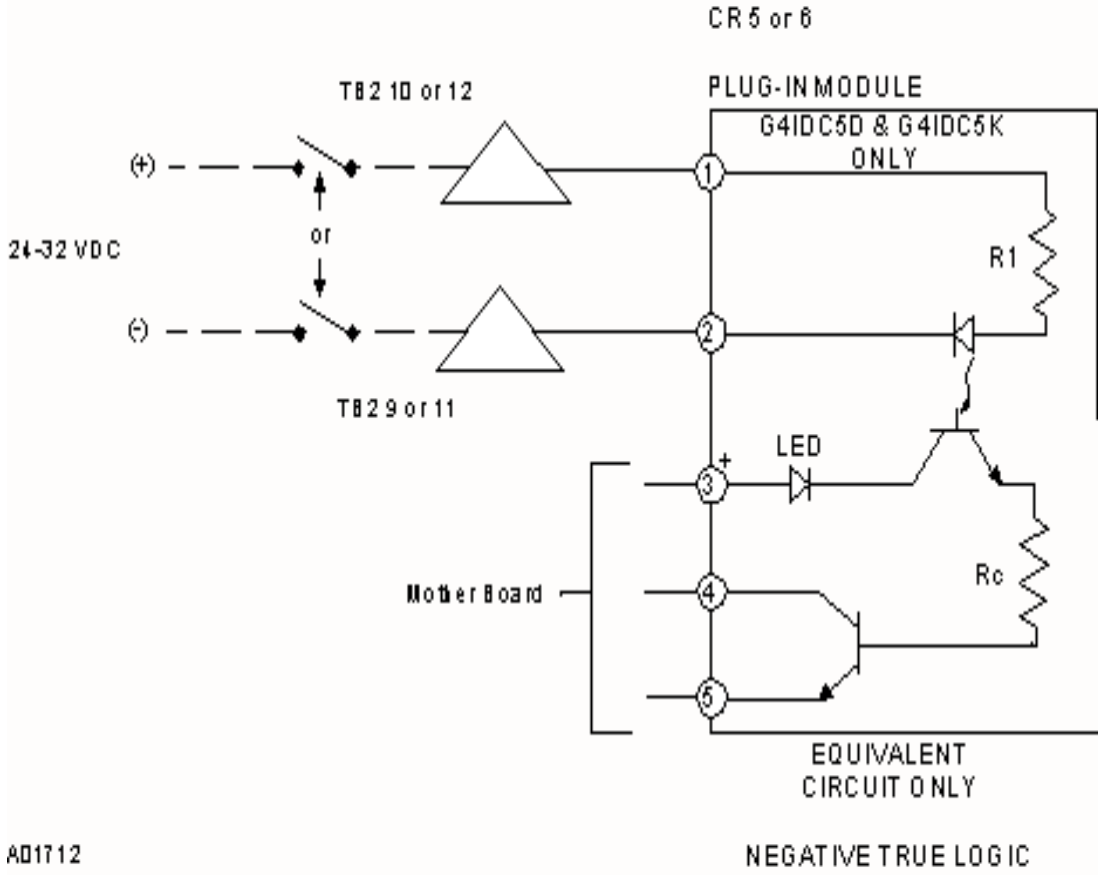

General Purpose Digital Outputs and Fault Output

There is provision on the mother board for four OPTO/22 Generation 4 modules

(3) are general purpose user definable and (1) is a non definable, fail safe, Micro-Tech hardware FAILURE output (Figure 1-4 AC or Figure 1-5 DC)

Optically isolated, OPTO/22 Generation 4 series, 5 volt logic response time (time resolution) 10 ms

Powered by external AC or DC source

Figure 1-4. AC Output Module

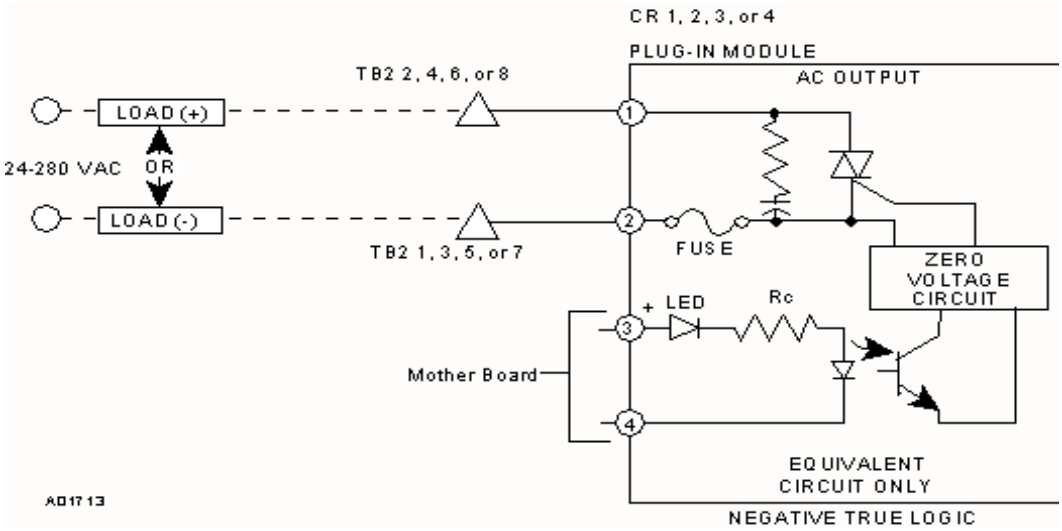

Figure 1-5. DC Output Module

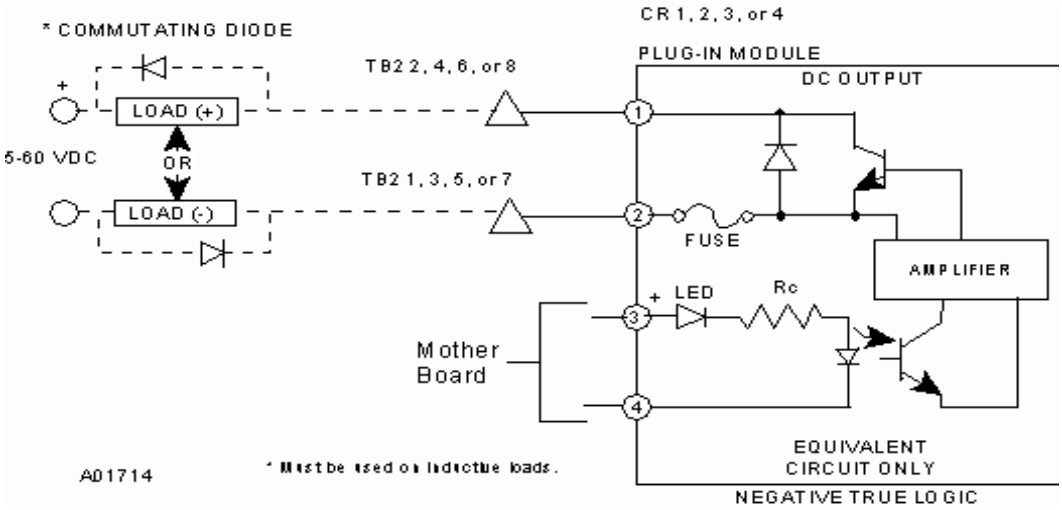

Analog I/O Board A

Depopulated version of Analog I/O B:

(1) current output (Figure 1-6)
optically isolated
isolated power source
Voltage output by adding an internal dropping resistor.
Output range: User selectable 0-20 mA or 4-20 mA, representing 0 to 100% variable.
Resistive load: 800 ohms maximum
Capacitive load: no limit

Figure 1-6. High-Level Analog Output

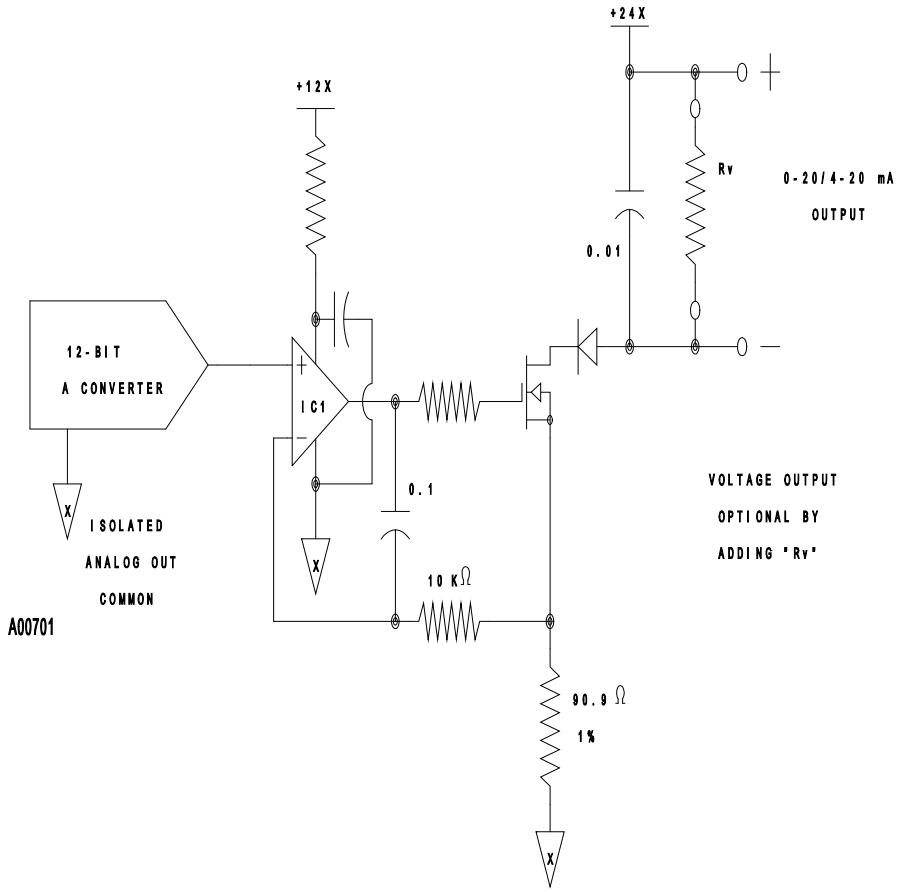

Analog I/O Board B (Optional)

(2) high level inputs (Figure 1-7)

Type: Differential voltage input.
(0-20 mA or 4-20 mA with internal resistor, jumper selectable)
Range: 0-5 volt, or ±5 volt, programmable.
Input impedance: 100 k nominal (differential)
Maximum usable input voltage: 106 % of full-scale
Non-isolated.
Maximum non-destructive input voltage: 12 V peak

Figure 1-7. High-Level Analog Input

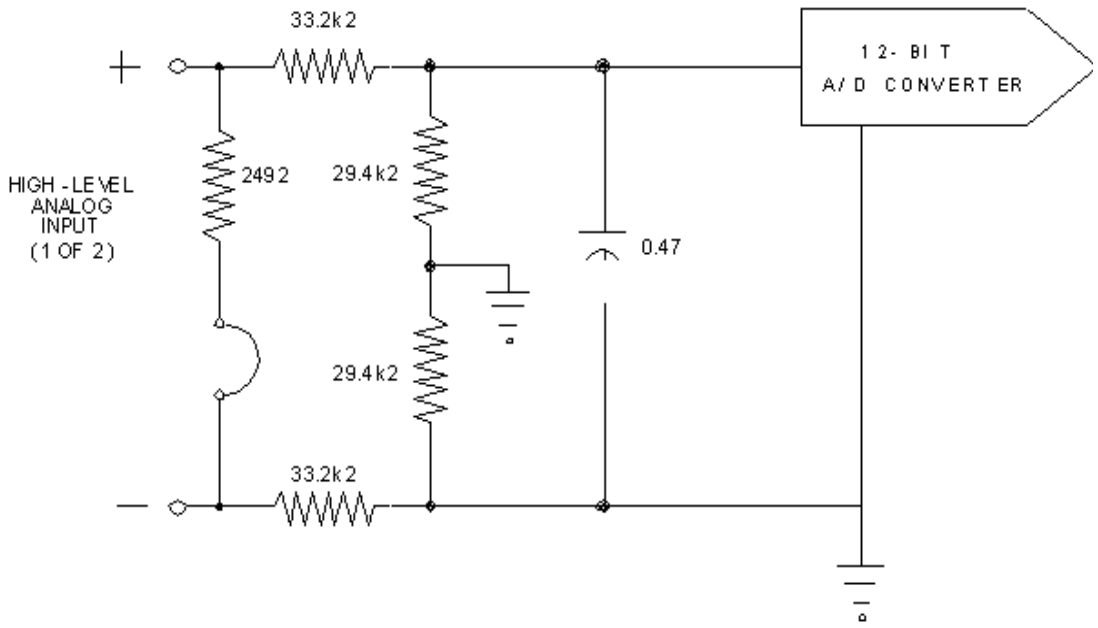

optically isolated
Isolated power source
Voltage output by adding an internal dropping resistor.
Output range: User selectable 0-20 mA or 4-20 mA, representing 0 to 100% variable.
Resistive load: 800 ohms maximum
Capacitive load: no limit

Communication "A" Board

Refer to Serial Communications manual REC 3949 if this option is installed.

Allen-Bradley Remote I/O

Refer to Allen-Bradley Remote I/O manual REC 4012 if this option is installed.

Profibus-DP

Refer to PROFIBUS-DP (REC 4063) manual if this option is installed.

Chapter 2 Installation

This chapter describes the Integrator installation procedure, hardware configuration, and initial programming. Initial programming is a machine directed procedure prompting the operator to enter required conveyor and belt scale parameters. After all parameters have been entered, the integrator performs an unassisted zero and span calibration.

Installation

The Integrator can be located indoors or outdoors. It should be located as close to the load cells as possible and not be exposed to excessive vibration, heat, or moisturize Integrator may be mounted up to 3,000 feet of cable from the scale (see Figure 2-1).

Figure 2-1. Typical Micro-Tech 2001 Installation

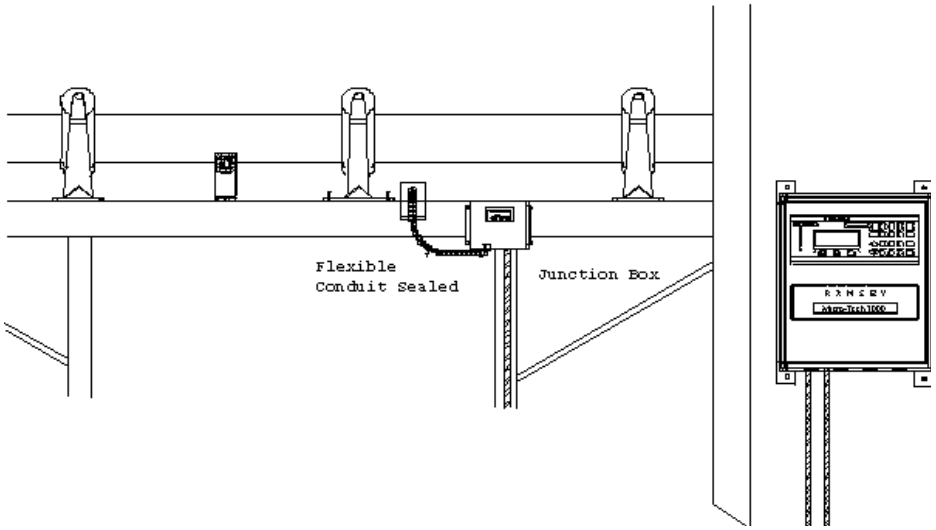

Mounting

Mount the Integrator to a rigid, flat, vertical surface using four mounting holes provided on the back of the enclosure (Figure 2-2).

Care should be taken to insure the mounting surface is flat so as not to twist or warp the fiberglass enclosure when tightening the mounting bolts.

Figure 2-2. Outline and Mounting Dimensions Micro-Tech 2000 - Model 2001 Integrator

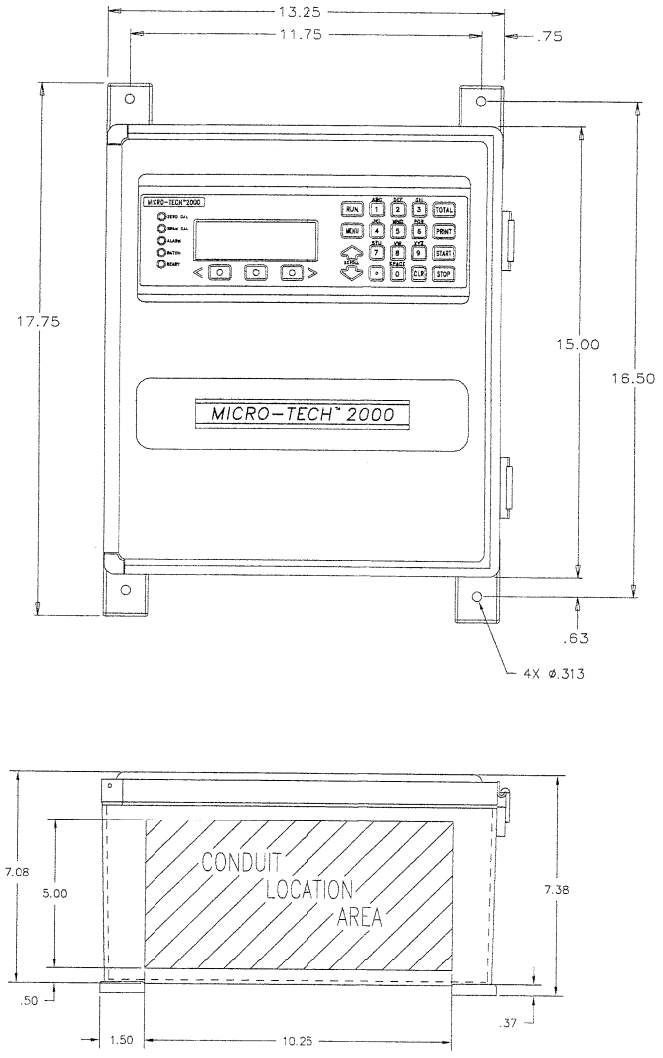

Safety Precautions

CAUTION: DO NOT INSTALL, OPERATE, OR PERFORM ANY MAINTENANCE PROCEDURES UNTIL YOU HAVE READ THE SAFETY PRECAUTIONS WHICH FOLLOW.

- Do not connect power to the electronics or turn on the unit until you have read and understood this entire manual. The precautions and procedures presented in this manual must be followed carefully in order to prevent equipment damage and protect the operator from possible injury.

CAUTION: Hands and clothing must be kept away from all moving or rotating parts.

WARNING: Covers over the electronics should always remain in place during operation. They should be removed only for maintenance procedures with the machine's power OFF. Be sure to replace all covers before resuming operation.

WARNING: All switches (such as control or power) must be OFF when checking input AC electrical connections, removing or inserting printed circuit boards, or attaching voltmeters to the system.

WARNING: Incoming voltages must be checked with a voltmeter before being connected to the electronics.

WARNING: Extreme caution must be used in testing in, on, or around the electronics, PC boards, or modules. There are voltages in excess of 115 V or 230 V in these areas. Avoid high voltage and static electricity around the printed circuit boards.

- Maintenance procedures should be performed only by qualified service personnel and in accordance with procedures/instructions given in this manual.

- During maintenance, a safety tag (not supplied by Thermo) should be displayed in the ON/OFF switch areas as a precaution instructing others not to operate the unit.

- Only qualified service technicians should be allowed to open and work in the electronics, power supply, control, or switch boxes.
- Objects should never be placed or stored on the integrator.
- This equipment should not be operated nor utilized in applications other than those stated in the original order. (To adapt production rates or applications, consult Thermo Products Customer Service for recommendations.)
- All panels covering the electronics must be in place and tight before wash down procedures. Damage to the electronics could result from water, moisture, or contamination in the electronics housing.

Utility Connections (Incoming Power)

CAUTION: DO NOT CONNECT POWER UNTIL YOU HAVE READ AND UNDERSTOOD THIS ENTIRE SECTION. IMPROPER CONNECTION MAY RESULT IN DAMAGE TO YOU INTEGRATOR.

CAUTION: VERIFY THAT THE INPUT VOLTAGE IS CORRECT WITH AN AC VOLTMETER BEFORE YOU CONNECT IT TO THE INTEGRATOR.

CAUTION: EARTH GROUND MUST BE PROVIDED TO THE INTEGRATOR. DO NOT USE CONDUIT TO PROVIDE THIS GROUND.

CAUTION: A READILY ACCESSIBLE DISCONNECT DEVICE (MAXIMUM 20 AMP) SHALL BE INCORPORATED IN THE FIELD WIRING. THIS DISCONNECT DEVICE SHOULD BE IN EASY REACH OF THE OPERATOR AND IT MUST BE MARKED AS THE DISCONNECTING DEVICE FOR THE EQUIPMENT.

CAUTION: REFER TO THE FIELD WIRING DIAGRAM (Figure 2-3) AS A GUIDE IF YOU DO NOT HAVE A SPECIFIC WIRING DIAGRAM FOR YOUR SYSTEM. FOLLOW YOUR LOCAL ELECTRONIC CODES AND REGULATIONS FOR MINIMUM WIRE SIZE AND ROUTING.

Figure 2-3. Field Wiring Diagram

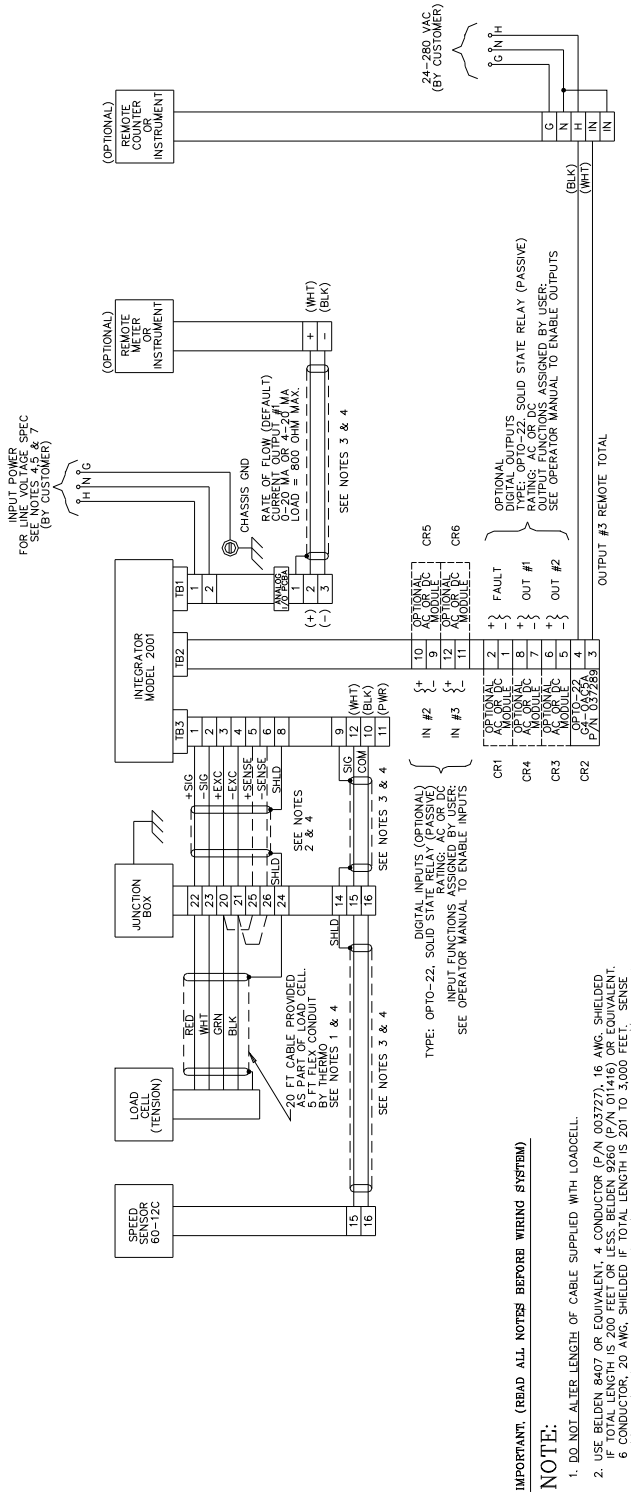

IMPORTANT. (READ ALL NOTES BEFORE WIRING SYSTEM)

NOTE:

1. DO NOT ALTER LENGTH OF CABLE SUPPLIED WITH LOADCELL.
2. USE BELDEN 8407 OR EQUIVALENT, 4 CONDUCTOR (P/N 003727), 16 AWG, SHIELDED IF TOTAL LENGTH IS 200 FEET OR LESS, BELDEN 9260 (P/N 011416) OR EQUIVALENT, 6 CONDUCTOR, 20 AWG, SHIELDED IF TOTAL LENGTH IS 201 TO 3,000 FEET. SENSE CONNECTIONS ARE REQUIRED IF TOTAL LENGTH IS OVER 200 FEET. SET JUMPERS OP10 AND OP11 ON MOTHER BOARD TO POSITION "B".
3. SPEED SENSOR AND ANALOG OUTPUT: USE BELDEN 8760 (P/N 003249) OR EQUIVALENT, 2 CONDUCTOR, 18 AWG. SHIELDED IF TOTAL IS 200 FEET OR LESS. USE BELDEN 8780 (P/N 003236), 2 CONDUCTOR, 16 AWG. SHIELDED IF TOTAL LENGTH IS 201 TO 3,000 FEET.
4. DO NOT RUN SIGNAL, LOADCELL, OR SPEED SENSOR CABLES IN SAME CONDUIT AS POWER WIRING. CONNECT SHIELDS ONLY WHERE SHOWN.
5. INPUT POWER REQUIREMENTS (FACTORY SET AT 120 VAC)
   - A. 110 VAC +10%/-15% 1/2 AMP 50 VA,50/60HZ
   - B. 120 VAC +10%/-15% 1/2 AMP 50 VA,50/60HZ
   - C. 220 VAC +10%/-15% 1/4 AMP 50 VA,50/60HZ
   - D. 240 VAC +10%/-15% 1/4 AMP 50 VA,50/60HZ
6. EARTH GROUND ALL ELECTRICAL ENCLOSURES.
7. ALL WIRING MUST BE IN ACCORDANCE WITH THE NATIONAL ELECTRIC CODE AND ALL LOCAL CODES. ALL WIRING, EXCEPT AS NOTED, IS THE RESPONSIBILITY OF THE CUSTOMER.

D07280A-A001

Wiring

1. Critical wiring conditions:

    - Insure power is off.
    - Do not route load cell and signal cables in the same conduit with power cables or any large source of electrical noise.
    - Earth ground all enclosures and conduits. A ground connection between all conduits is required.
    - Wiring should be long enough to allow the field terminal entry panel to swing down for circuit board access.
    - Connect the shields ONLY where shown.
    - Check that all wires are tight in their connections.
    - Never use a "megger" to check the wiring.
    - A readily accessible disconnect device (maximum 20 amps) shall be incorporated in the field wiring. This disconnect should be in easy reach of the operator and it must be marked as the disconnecting device for the equipment.
    - All conduits should enter the bottom of the enclosure. Do not run conduit through the top or sides of the enclosure.

2. To connect incoming power, use the following procedure (see Figure 2-2).

NOTE: All units shipped from the factory are configured for 120 VAC. If another input selection is desired, refer to.

- Rotate the screw latch mounted on the lower left corner of the front chassis counter-clockwise. Open the door.
- Route incoming power wiring through a conduit hole at the bottom right of the enclosure (see Figure 2-2).
- Wire safety ground terminal located on the side of the chassis.
- Wire HOT to H on TB1-1 (see Figure 2-3).
- Wire NEUTRAL to N on TB1-2.
- Close the front chassis cover and rotate the screw lock on the lower left corner counter-clockwise until locked. Verify the door is locked.

Integrator Configuration

The Micro-Tech 2001 is normally configured to the customer's specification. Configuration is repeated here in the event a change is needed.

Switches and removable jumpers are described in this section. The default position is noted in each description and, in most cases, is not changed.

Mother Board Configuration Jumpers and Switches

CAUTION: TO BE PERFORMED BY QUALIFIED SERVICE PERSONNEL ONLY.

1. AC voltage input power selection SW1 and SW2 are located on the right center section of the mother board (see Figure 2-4).

Defaults

AC INPUT VOLTAGE	FUSE F1 (SB)	SW1 SETTING	SW2 SETTING
110	0.5A	110	110/220
120	0.5A	110	120/240
220	0.25A	220	110/220
240	0.25A	220	120/240

First, set SW1 for nominal 110 VAC or 220 VAC. Next, set SW2 close to the actual input voltage.

Example:

Input Voltage = 117 VAC
SW1 = 110
SW2 = 120/240

Figure 2-4. Model 2001 Mother Board

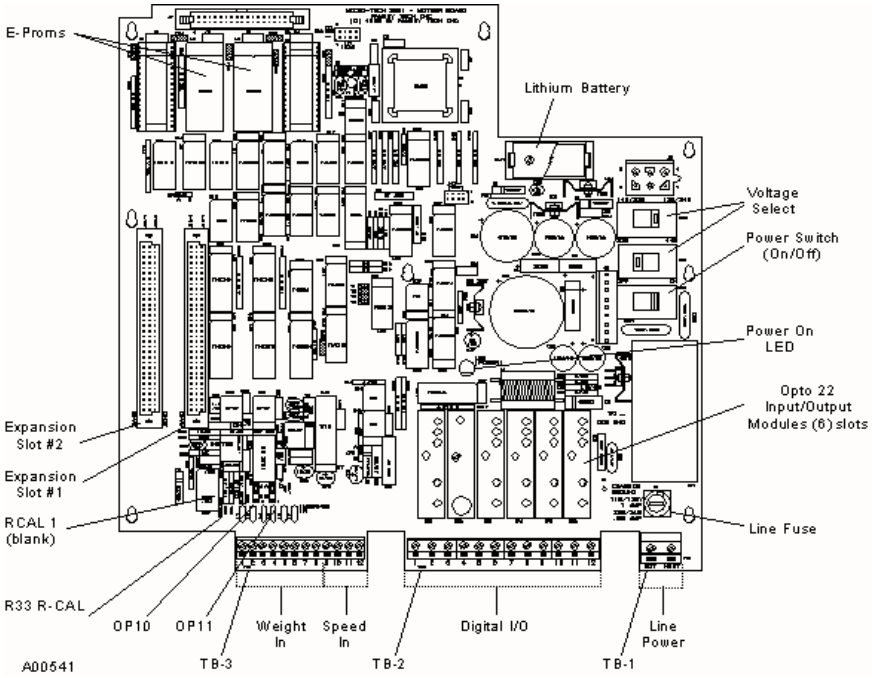

2. Load Cell Sense

Load cell sense is controlled by selectable jumpers OP10 and OP11, located on the lower left hand section of the mother board. The jumpers should be in position "A" local sense if the distance is less than 200 feet between the load cell and Integrator Figure 2-4).

For distances greater than 200 feet and less than 3,000, the jumpers should be in position "B". A special 6-wire cable is required. Refer to the field wiring drawing for jumper requirement in the scale junction box.

JUMPERS			
MODE	**OP10**	**OP11**	
Less than 200 feet	**"A"**	**"A"**	**Default**
Greater than 200 feet	**"B"**	**"B"**	

3. Digital Inputs

   Located on the Mother board are provisions for two status input optional OPTO/22 plug-in modules. The user definable general purpose inputs may be configured as normally open or normally closed. External AC or DC power for input logic is required.

   The user definable input choices are:

   External Alarm 1
   External Alarm 2
   External Alarm 3
   Print
   Belt Running
   Reset Total
   Reset Alarm
   Auto Zero
   Clip Detector
   Batch Start
   Batch Stop
   Batch Standby
   Calibration Select 1.. . .10

   Any two inputs may be selected. An optional AC or DC OPTO/22 module is required for each input.

4. Digital Outputs

   Located on the Mother board are provisions for four output optional OPTO/22 plug-in modules. Three digital outputs are user definable and the fourth one is permanently assigned as integrator fault. The three user definable digital outputs may be configured as normally open or normally closed. The fault output is normally closed and cannot be reconfigured or used as a general purpose output. External AC or DC power is required for all external devices wired to the output modules. One output module is included for remote totalization.

The user definable output choices are:

Alarm Cumulative

Shutdown Cumulative

Ready

High Load

Low Load

High Rate

Low Rate

High Speed

Low Speed

Totalization Pulse (Remote Counter)

Batch Preset Reach

Batch End

Load WTS (Weights)

5. Analog Board

   The analog board is available in the two configurations described below. (A) has one current output only; whereas, (B) has two analog inputs and two current outputs (Figure 2-6). The analog inputs are normally configured for current with a 250 ohm resistor installed across each input. For use with a 0-5 VDC input, shunts W3 (input #1) or W4 (input #2) must be cut. The Micro-Tech 2001 can support up to four current outputs. Four outputs require two (B) analog boards.

   a) One user definable 0-20/4-20 or 20-4/20-0 mA output (included).

      Rate

      Spread, or

      Load

b) Two +/- 5 VDC differential inputs and two user definable 0-20/4-20 or 20-4/20-0 mA outputs (optional).

Inputs

Incline Compensation

Moisture Compensation

Outputs

Rate

Speed, or

Load

c) Analog inputs are +/-5 VDC. Jumpers W3 and/or W4 are used to select 240 ohm impedance for 0-20/4-20 mA inputs (see Figure 2-6).

d) Field wiring connections are made to the TB4 terminal strip on bottom edge of the analog board. Note that the connector is removable for ease of termination.

Figure 2-5. Field Wiring Connections

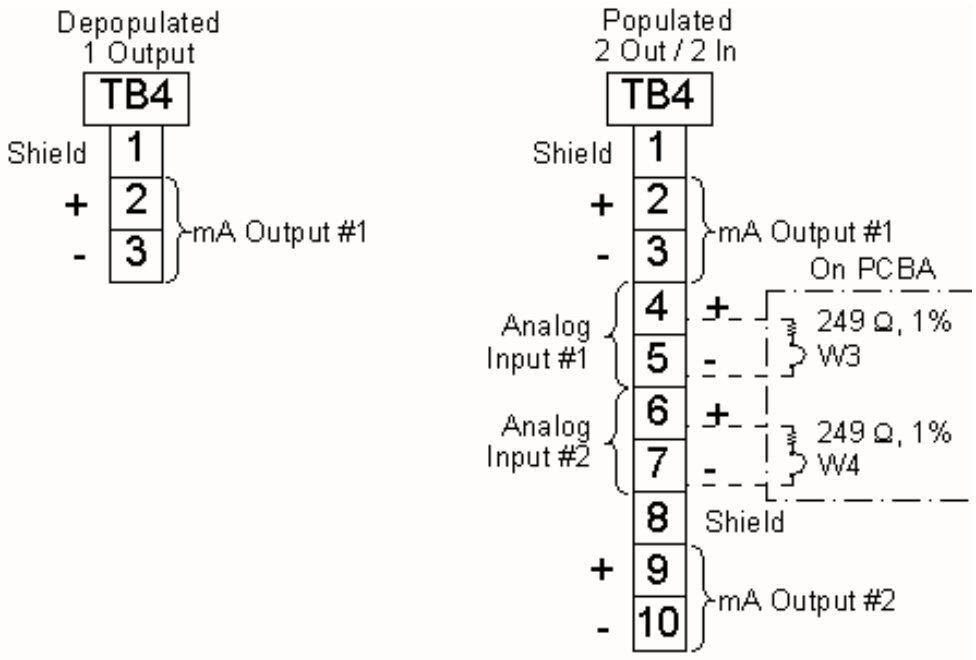

Figure 2-6. Analog I/O Board

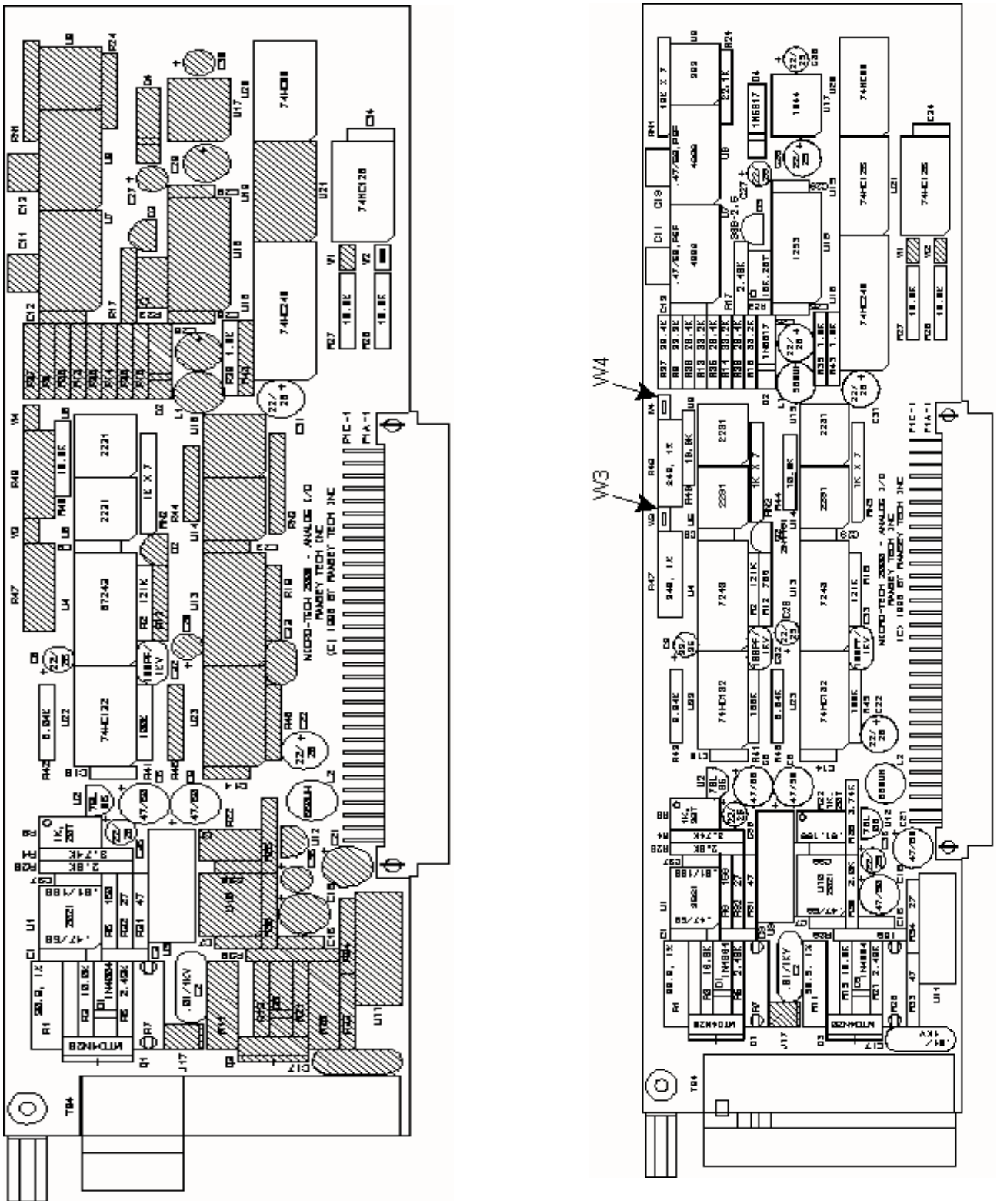

6. Frequency Output Board

The frequency output board is available as a field configurable device. The Micro-Tech 2001 can support up to two frequency outputs. The use of two outputs requires that two frequency output boards be installed.

a) User definable 0-30,000 Hz output

Rate

Speed, or

Load

b) Field wiring connections are made to the terminal strip on bottom edge of the frequency output board. Note that the connector is removable for ease of termination.

Figure 2-7. Field Wiring Connections

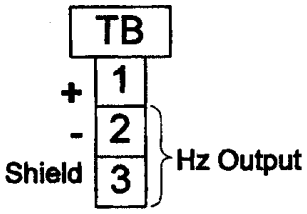

Figure 2-8. Field Wiring Connections

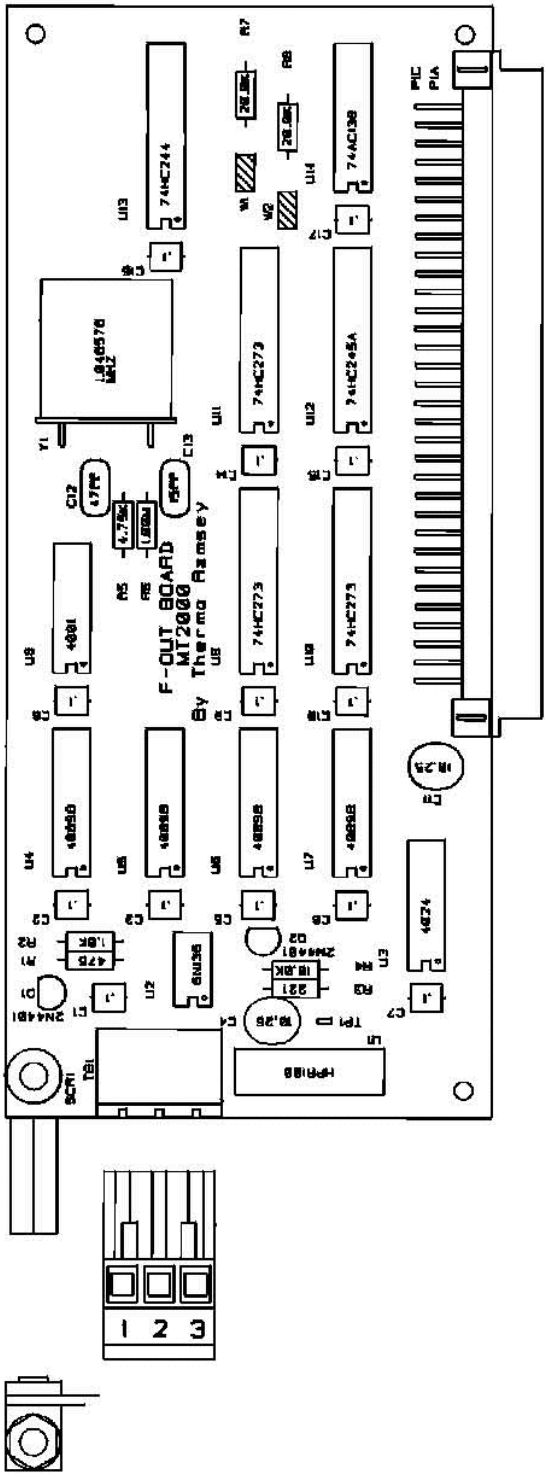

Initial Setup Procedures

Following mechanical and electrical installation, it is necessary that you program field data that is specific to your application into the Micro-Tech 2001 Integrator memory. The following setup procedure should be completed before calibration of your belt scale system is attempted. Refer to Chapter 3 of this manual if more details or assistance is necessary.

Determining Installation Parameters

Before turning on the conveyor belt or applying power to the belt scale system, it is necessary to complete the following statements. Refer to your System Data Sheet in the front of your belt scale manual (see Figure 2-9).

1. Scale Capacity

   Determine the scale's capacity in tons per hour and record the capacity below. (Example: 400.0)

   _____ (Tons Per Hour)

2. Belt Scale Code Number

   Determine the belt scale's code number from the System Data Sheet located in front of the scale manual or see Appendix A/1, Weighbridge Parameters. Record the code number below. (Example: code number one is a belt scale model 10-20-1 for conveyor width 18 through 36 inches.) Enter 0 for any weighbridge not found in the table.

   _____ (Belt Scale Code Number)

   Entering the code number enters a list of default parameters for the weighbridge selected. During initial programming, the Integrator calculates a calibration constant for R-Cal based on the default values. If test weights or test chains are used, their weight values are entered in the Cal Data Scroll after initial programming is completed.

   During initial programming, DETAIL can be selected after entering the belt scale code number. All weighbridge default values can be viewed by scrolling down. A parameter can be changed at this time if necessary.

NOTE: Enter code 0 or selecting DETAIL requires all measurements in Steps 3 through 14 below to be made and entered during initial programming.

Figure 2-9. Belt Scale Weighbridge

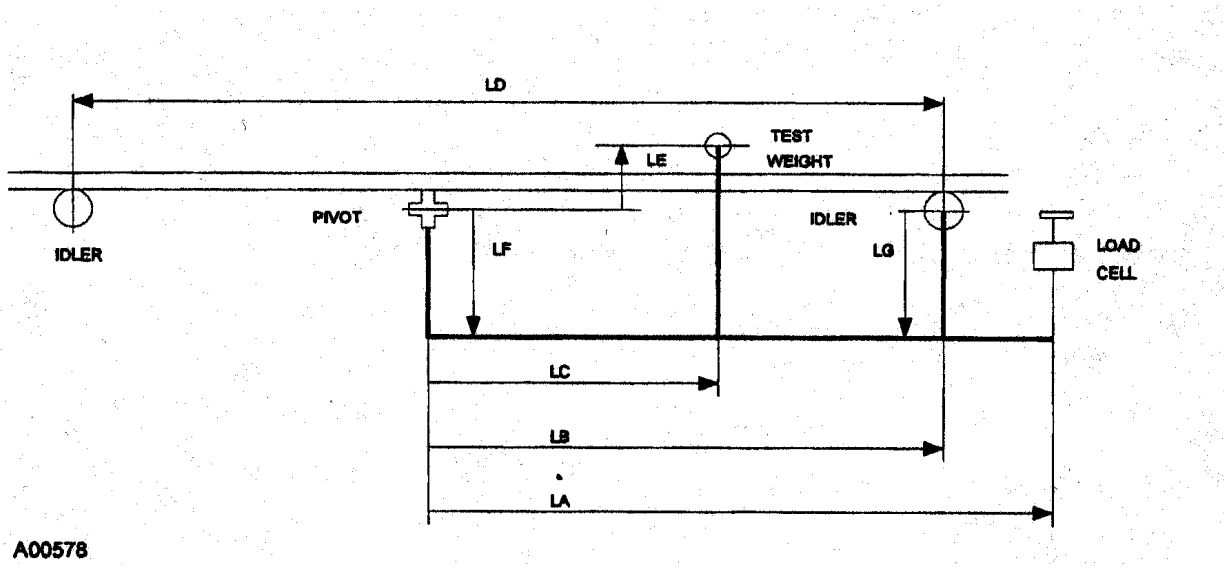

BELT SCALE MODEL 10-20

3a.	**Pivot to Load Cell**	**(LA)**
3c.	**Pivot to 1° Idler**	**(LB1)**
3d.	**Pivot to 2° Idler**	**(LB2)**
3e.	**Pivot to 3° Idler**	**(LB3)**
3f.	**Pivot to 4° Idler**	**(LB4)**
3g.	**Pivot to 5° Idler**	**(LB5)**
3h.	**Pivot to 6° Idler**	**(LB6)**
4.	**Pivot to Test Weight Length**	**(LC)**
5.	**Pivot to Test Weight Height**	**(LE)**
8.	**Idler Spacing**	**(LD)**
6.	**Pivot to Carriage Height**	**(LF)**
7.	**Carry Roll to Carriage Height**	**(LG)**
9.	**Conveyor's Angle**	**(0)**
3b.	**Idlers Number**	**(IDN)**

3. Belt Scale Weighbridge Dimensions

   Refer to Figure 2-9 and the sketches below for measurements.

   a. Pivot to Load Cell - LA

      As indicated on Figure 2-10, measure the distance from the pivot center line to the load cell center line to the nearest 0.032 (1/32”). Record the distance below. (Example: 32.00)

      _____" (Pivot to Load Cell Distance)

Figure 2-10. Pivot to Load Cell

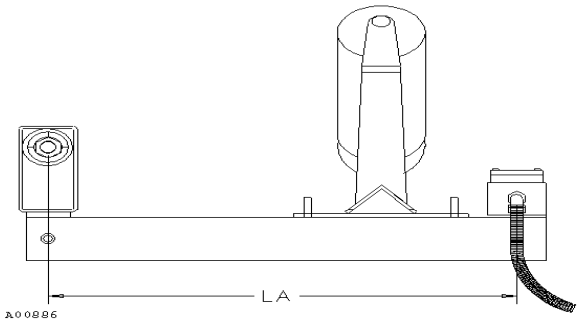

   b. Number of Weigh Idlers on Scale Weighbridge(s) - IDN

      _____ (Number of Weigh Idlers)

   a. Pivot to 1st Idler (Weigh Idler) - LB1

      As indicated on Figure 2-11, measure the distance from the pivot center line to the weigh idler's center line to the nearest 0.032 (1/32”). Record the distance below. (Example: 24.00)

      _____" (Pivot to Weigh Idler Distance)

      (Model 10-20 belt scale shown.)

Figure 2-11. Pivot to 1st Idler

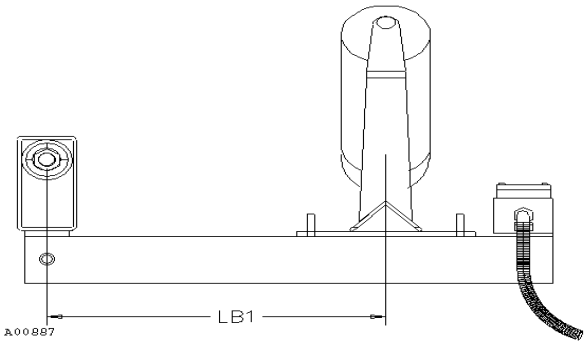

d. Pivot to 2nd Weigh Idler (Optional)

As indicated on Figure measure the distance from the pivot center line to the second weigh idler's center line to the nearest 0.032 (1/32”). Record the distance below. (Example: 24.00)

_____" (Pivot to 2nd Weigh Idler Distance)

(Model 10-22 belt scale, 10-17-2 similar.)

Figure 2-12. Pivot to 2nd Weigh Idler

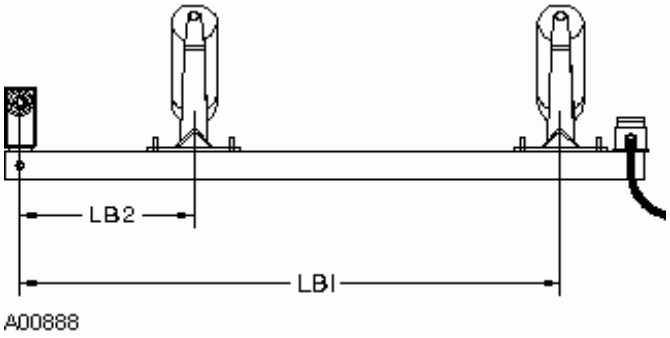

NOTE: Up to six (6) weigh idlers on a single weighbridge may be entered during programming. Measure and record the same as step d above for each additional weigh idler.

e. Pivot to 1st, 2nd, 3rd and 4th Idler (Weigh Idler)

As indicated on Figure, measure the distance from the pivot center line to the weigh idler's center line to the nearest 0.032 (1/32”). Record the distance below. (Example: 24.00)

_____" (Pivot to Weigh Idler Distance)

(Model 10-17-4 belt scale shown.)

Figure 2-13. Pivot to 1st, 2nd, 3rd and 4th Idler

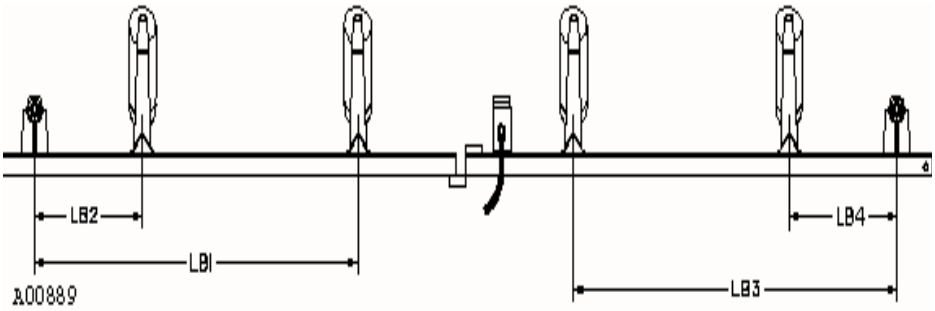

NOTE: Complete Steps 4, 5, 6, and 7 below only if test weights are used for calibration.

4. Pivot to Test Weight Height - LE

Measure the distance from the center line of the pivot to the actual point of test weight contact to the nearest 0.032 (1/32) inch (Figure 2-14). Record the distance below. If contact point is below pivot, value is negative (-).

(Example: 0.00) If test weights are not used, disregard this measurement.

_____" (Pivot to Test Weight Height Distance)

Figure 2-14. Pivot to Test Weight Height

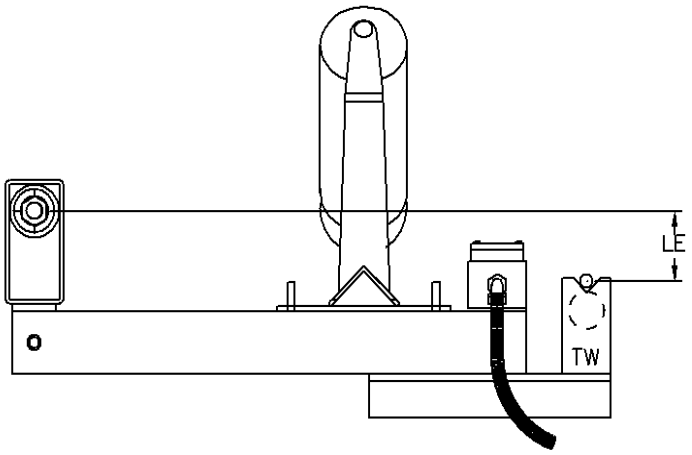

5. Pivot to Test Weight Length - LC

   Measure the distance from the centering of the pivot to the actual point of test weight contact to the nearest 0.032 (1/32) inch (Figure 2-15). Record the distance below.

   (Example: 38.00) If test weights are not used, disregard this measurement.

   _____" (Pivot to Test Weight Length Distance)

Figure 2-15. Pivot to Test Weight Length

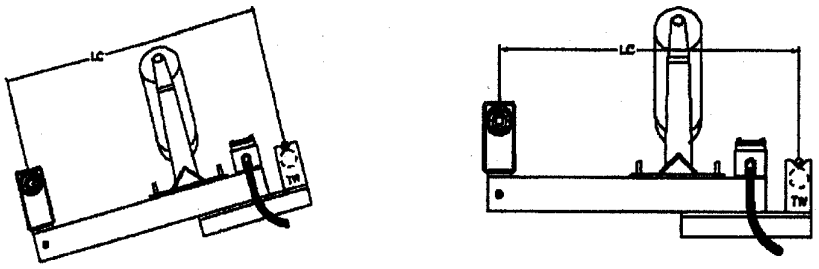

6. Pivot to Carriage LF

   Measure the distance from the center line of the pivot to the top of the carriage rails to the nearest 0.032 (1/32) inch (Figure 2-16). Record the distance below. (Example: 6.50)

   _____" (Pivot to Carriage Height Distance)

Figure 2-16. Pivot to Carriage Height

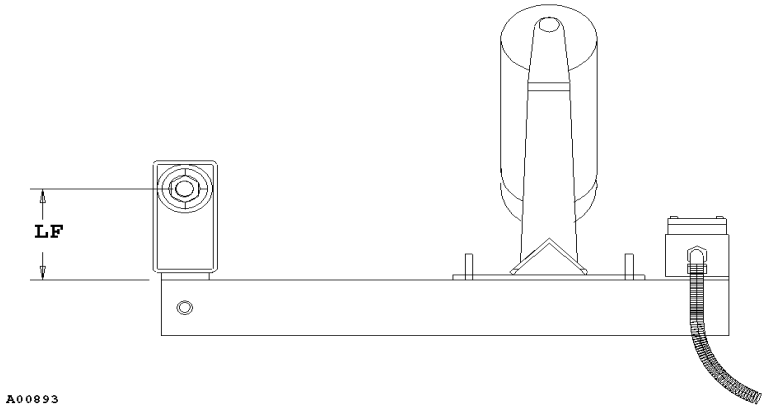

7. Roll to Carriage Height - LG

   Measure the distance from the top of the carriage rails to the top of the weigh idler carry roll where the belt makes contact on trough idlers (Figure 2-17). Flat idlers measure to the center line of the grease fitting to the nearest 0.032 (1/32) inch. Record the distance below. (Example: 6.50)

   _____" (Roll to Carriage Height Distance)

Figure 2-17. Roll to Carriage Height

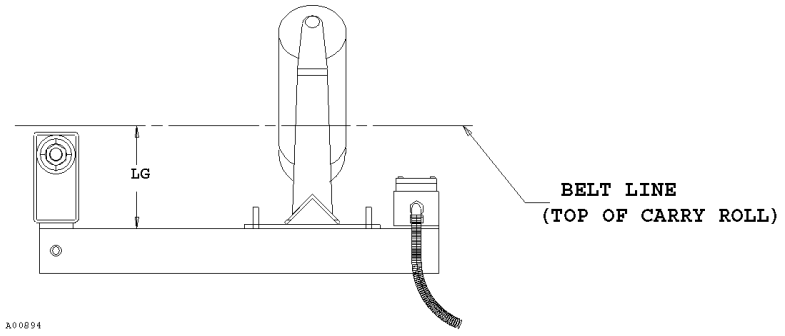

8. Number of Load Cells

   Enter the number of load cells. (Example: 1)

   _____ (Number of Load Cells)

9. Idler Spacing Scale Area - LD

   Measure the distances between the center lines of all idlers from the plus 1 (+1) to the minus 1 (-1) idler on both sides of the conveyor (left and right). Add all the measurements together and divide by the number of measurements to determine the average distance.

NOTE: If the distances measured is not all equal within 0.032 (1/32") the scale is not properly installed. Refer to the belt scale installation manual provided.

_____" (Idler Spacing)

10. Conveyor's Angle of Incline

    Measure the conveyor's angle of incline to the nearest 0.1 degrees. Record the degree of angle below. (Example: 16.0) Refer to Figure 2-18 for more information on how to measure angle of incline.

    _____ degrees (Angle of Conveyor Incline)

11. Load Cell Capacity

    From the belt scale data sheet located in the front of its manual, determine the load cell size in pounds. Record the weight below. (Example: 250.0)

    _____ pounds (Load Cell Weight)

12. Load Cell Sensitivity

    From the load cell name plate, determine the load cell sensitivity in mV/V. Record the sensitivity below. (Example 3.000 mV/V)

    _____ (Load Cell Sensitivity)

13. Load Cell Resistance

    Measure the signal (output) resistance of each load cell with a digital VOM. Record the resistance below. (Example: 350.000)

    _____ (Load Cell Resistance)

14. Conveyor Belt Length

    Using a long tape measure, measure the length of one complete belt revolution. Measure to the nearest 0.1 foot. Record the length below. (Example: 1000.0)

    _____ feet (Conveyor Belt Length)

Figure 2-18. Measuring Angle of Incline

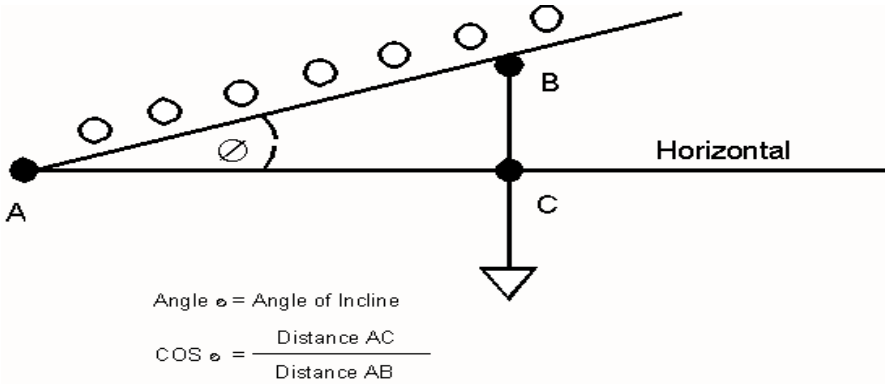

Choose a convenient distance _AB_ and measure it in inches.

Hang a plumb line from _B_.

Measure the horizontal distance from _A_ to plumb line in inches (_AC_). Divide _AC_ by _AB_ to get COSý.

If angle of incline in degrees is known, use the following table.

Angle ∅	**Cos ∅**		**Angle ∅**	**Cos ∅**		**Angle ∅**	**Cos ∅**
0	1.0000		6	.9945		12	.9781
1	.9998		7	.9925		13	.9744
2	.9994		8	.9903		14	.9703
3	.9986		9	.9877		15	.9659
4	.9976		10	.9848		16	.9613
5	.9962		11	.9816		17	.9563

Programming the Micro-Tech 2001 Integrator

When power is first applied to the Integrator, the system steps the operator through menus and options that bring the system to a weighing state. Soft keys, numeric keys and the scroll control keys are used to select choices. The RUN and MENU control keys are inactive during this procedure.

CAUTION: Inside the Integrator's front panel (Figure 2-19) are two voltage selection slide switches. Ensure they are in the correct position before applying power or equipment damage will occur.

1. Turn the belt scale conveyor belt on. Run the conveyor empty during setup and calibration.

Figure 2-19. Micro-Tech 2001 CPU Board

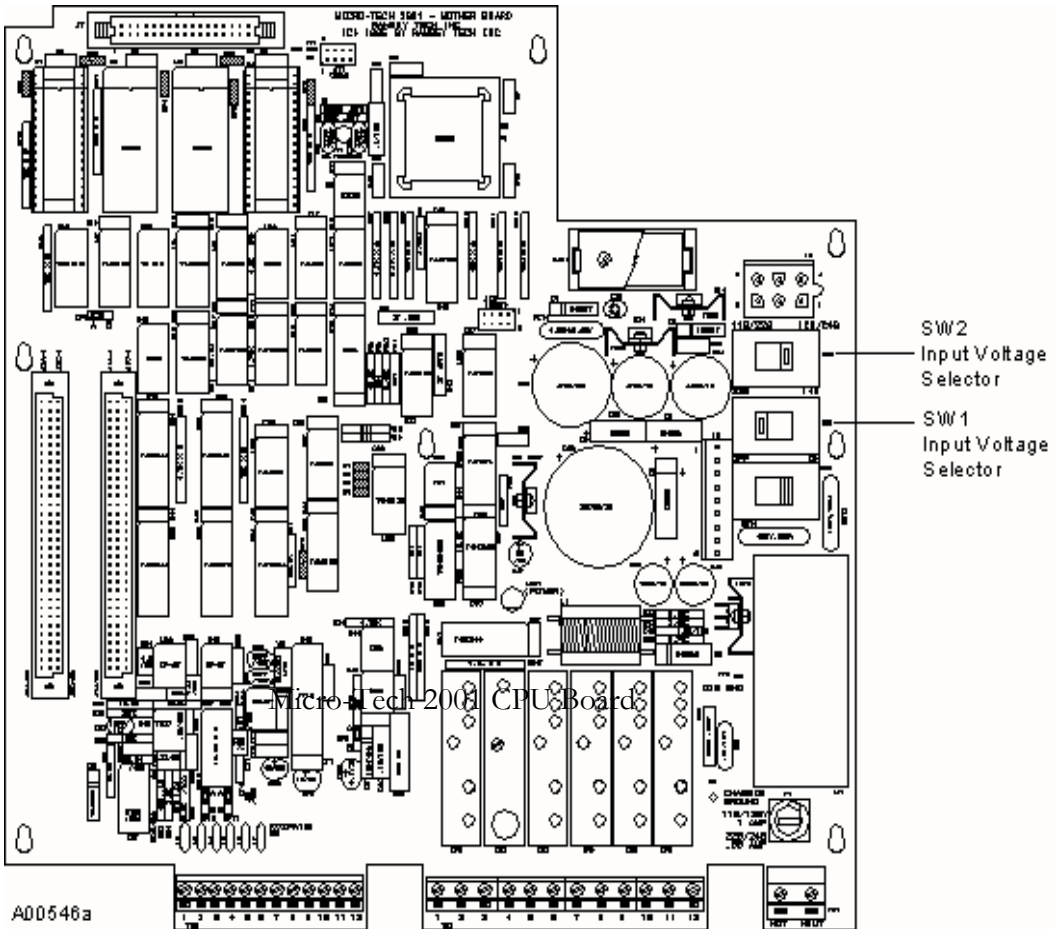

Micro-Tech 2001 CPU Board

2. Programming the Integrator

The programming mode begins the first time power is applied. Information requested by the instructional screens should be entered before moving to the next screen. The belt scale is calibrated at the end of this procedure provided the correct information is entered. The alarm light flashes during the programming procedure and clears when calibration is complete.

The programming mode begins with the following instructional screens.

```
    - MEMORY ERASED -
Choose the language
key to continue to
ESP                 USA
```

The Micro-Tech 2000 is a dual language instrument. USA is always the first language. The standard configuration provides Spanish (ESP) as the second language. Other languages, such as German (GER), are available upon request (consult factory). Press the desired language.

```
Initial scale setup
and calibration
Press down SCROLL.
```

Press the DOWN SCROLL key.

```
Press key under HELP
for more information

HELP
```

"HELP" is flashing

Press the HELP soft key.

Key with dot (softkey) performs action of word above it. MORE RETURN

When RETURN is pressed, the user is returned to the previous screen. Pressing MORE advances the system to the next screen.

Press the MORE key.

Use down SCROLL key to advance through the menus. MORE RETURN

Pressing MORE or RETURN reverts the screen back to previous screens in this series.

Press the DOWN scroll key.

3. Press SCROLL DOWN key to accept the default unit, or CHOICE soft key to scroll selections. Press ENTER to confirm your selection. Scroll down.

- DISPLAY SCROLL 1 - Measure units > ENGLISH < CHOICE ENTER

Default: **ENGLISH**

Selections: **ENGLISH, METRIC, MIXED**
If English, all units in English
If Metric, all units in Metric
If Mixed, units may be a combination of English and Metric

NOTE. If the Measure units are changed from English to Metric (or vice versa) after the scale is calibrated, the span number will change but the calibration will remain the same.

4. The units to be used for totalization are selected here. Press ENTER soft key to accept the default unit, or CHOICE soft key to scroll selections. Press ENTER to confirm your selection. Scroll down.

```
    - DISPLAY SCROLL 2 -
Totalization Units
> Tons <
CHOICE        ENTER
```

if ENGLISH:	**Default:**	**Tons**
	Selections:	**Tons, LTons, Pounds**
if METRIC:	**Default**	**tonnes**
	Selections:	**tonnes, kg**
if MIXED:	**Default:**	**Tons**
	Selections:	**Tons, LTons, kg, Pounds, tonnes**

5. Units used for parameters expressed in length are selected here. Selections are only available if MIXED units are in use. Press ENTER soft key to accept the default unit, or CHOICE soft key to scroll selections. Press ENTER to confirm your selection. Scroll down.

```
    - DISPLAY SCROLL 3 -
Length Units
> feet <
CHOICE        ENTER
```

if ENGLISH: Default: Feet

if METRIC: Default meters

if MIXED: Default: Feet

Selections: Feet. meters

6. The rate is displayed according to the units selected here. Press ENTER soft key to accept the default unit, or CHOICE soft key to scroll selections. Press ENTER to confirm your selection. Scroll down.

```
    - DISPLAY SCROLL 4 -
Rate Units
> TPH <
CHOICE       ENTER
```

if ENGLISH: Default: Tph

Selections: Tph, LTph, Lb/mn, LT/mn, Percent %, Lb/h

if METRIC: Default kg/h

Selections: t/h, kg/m, t/m, Percent %, kg/h

if MIXED: Default: Tph

Selections: Tph, LTph, kg/m. t/m, Lb/m, t/mn, Lt/mn, Percent %, kg/h, t/h, Lb/h

7. The units used for entering the load cell capacity are specified here. In this particular case, the use of English or Metric units is always allowed, even if MIXED is not specified. Press ENTER soft key to accept the default unit, or CHOICE soft key to scroll selections. Press ENTER to confirm your selection. Scroll down.

```
    - DISPLAY SCROLL 5 -
Load cell Units
> Pounds <
CHOICE       ENTER
```

if ENGLISH: or MIXED:	**Default:**	**Pounds**
if METRIC:	**Default:**	**kilograms**
	Selections:	**Lbs, kg**

8. The next entry is the scale capacity, which is the maximum rate at which the scale is allowed to work. This entry also defines the default number of decimal places that are used for displaying rate. Use numeric keys for entering the number, confirm with ENTER. Scroll down.

```
    - SC DATA SCROLL 1 -
Max. scale capacity
500.00     Tph
ENTER
```

Default: **500.0**

Min: **1**

Max: **200000**

9. When the Scale capacity is entered, the number of decimal places is also defined. If, for example, the User enters 500.0, this sets the "Scale Divisions" parameter to 0.1. Advancing to the next scroll, the User then sees first the Scale Division corresponding to the just entered Scale Capacity (in the example 0.1). If required, the User is able to alter the Scale Division to any of the available options.

   Press the ENTER soft key to accept the default divisions, or the CHOICE soft key to scroll selections. Press ENTER to confirm your selection. Scroll down.

```
    - SC DATA SCROLL 2 -
Scale divisions
> 0.1 <
CHOICE        ENTER
```

Default: **0.1**

Selections: **0.1, 0.2, 0.5, 1, 2, 5, 10, 20, 50, 0.01, 0.02, 0.05, 0.001, 0.002, 0.005**

10. Selecting the Weighbridge Model

By entering the code number of your Thermo scale on the next screen, the Integrator automatically calculates parameters of the system such as number of load cells and number of weigh idlers. This entry is also used for internal calibration calculations. The default model number is 1, which corresponds to belt scale model 10-20-1.

```
    - SC DATA SCROLL 3 -
Belt scale code #
>  1  <
ENTER                DETAIL
```

Default: **1**

Min: **0**

Max: **500**

Press ENTER to accept the displayed selection from the database listed in Appendix A/1, Weighbridge Parameters. If ENTER is used, the scrolls from 3A to 3J are not displayed. Skip to Step 12.

Press DETAIL if you want to force the following scrolls #3A to 3O to be displayed even if ENTER was used.

Enter 0 if you want to define the weighbridge not using the database. This should only be done for special weighbridges that are not part of the standard set of Thermo scales. Entering 0 forces the following scrolls 3A to 3O to be displayed.

11. Detailing the Mechanical Parameters of the Frame

    The following screens are only displayed if OTHER or DETAIL were pressed. Refer to Figure 2-6.

    Parameter LA: pivot to Load cell distance: The distance from pivot to load cell should be measured to within 0.032 (1/32) inch (1 mm).

    Using the numeric keys, enter the distance recorded in Determining Installation Parameters and press ENTER. For weighbridges which do not have a pivot, enter zero.

```
    - SC DATA SCROLL 3A -
Pivot to load cell
Distance:      000.00 In
ENTER
```

If ENGLISH or MIXED:		**If METRIC:**	
Default:	**32 in**	**Default:**	**1000 mm**
Min:	**0.00 in**	**Min:**	**0 mm**
Max:	**150.00 in**	**Max:**	**3800 mm**

    This is the number of weigh idlers affixed to the scale weighbridge.

```
    - SC DATA SCROLL 3B -
# of weigh idlers
 1
ENTER
```

Default:	**1**
Min:	**1**
Max:	**6**

Parameter LB1: Pivot to first weigh idler distance.
Measure the distance between the pivot center line and first weigh idler center line. Enter the distance (within 0.032 inch or 1 mm) recorded in Determining Installation Parameters. For weighbridges which do not have a pivot, enter zero.

```
- SC DATA SCROLL 3C -
Pivot to 1st idler
distance        000.00 In
ENTER
```

If ENGLISH or MIXED:		**If METRIC:**	
Default:	**24 in**	**Default:**	**800 mm**
Min:	**0.00 in**	**Min:**	**0 mm**
Max:	**100.00 in**	**Max:**	**2500 mm**

If the number of weigh idlers entered in scroll 3B is more than one, the following screens are displayed. Measure the distance between the pivot center line and second weigh idler center line. Enter the distance (within 0.032 inch or 1 mm) recorded in Determining Installation Parameters. For weighbridges which do not have a pivot, enter zero.

Only if # of weigh idlers >=2:

```
- SC DATA SCROLL 3D -
Pivot to 2nd idler
distance        000.00 In
ENTER
```

If ENGLISH or MIXED:		If METRIC:	
Default:	**0.00 in**	**Default:**	**0 mm**
Min:	**0.00 in**	**Min:**	**0 mm**
Max:	**100.00 in**	**Max:**	**2500 mm**

Only if # of weigh idlers >=3:

- SC DATA SCROLL 3E -
Pivot to 3rd idler
distance 000.00 In
ENTER

If ENGLISH or MIXED:		If METRIC:	
Default:	**0.00 in**	**Default:**	**0 mm**
Min:	**0.00 in**	**Min:**	**0 mm**
Max:	**100.00 in**	**Max:**	**2500 mm**

Only if # of weigh idlers >=4:

- SC DATA SCROLL 3F -
Pivot to 4th idler
distance 000.00 In
ENTER

If ENGLISH or MIXED:		If METRIC:	
Default:	**0.00 in**	**Default:**	**0 mm**
Min:	**0.00 in**	**Min:**	**0 mm**
Max:	**100.00 in**	**Max:**	**2500 mm**

Only if # of weigh idlers >=5:

- SC DATA SCROLL 3G -
Pivot to 5th idler
distance 000.00 In
ENTER

If ENGLISH or MIXED:		**If METRIC:**	
Default:	**0.00 in**	**Default:**	**0 mm**
Min:	**0.00 in**	**Min:**	**0 mm**
Max:	**100.00 in**	**Max:**	**2500 mm**

Only if # of weigh idlers =6:

- SC DATA SCROLL 3H -
Pivot to 6th idler
distance 000.00 In
ENTER

If ENGLISH or MIXED:		**If METRIC:**	
Default:	**0.00 in**	**Default:**	**0 mm**
Min:	**0.00 in**	**Min:**	**0 mm**
Max:	**100.00 in**	**Max:**	**2500 mm**

NOTE. All measurements must be (within 0.032 inch or 1 mm) recorded in Determining Installation Parameters. Enter the distance with the numeric keys and press ENTER.

Parameter LE: Pivot to test-weight height. For weighbridges which do not have a pivot, enter zero. 3I, L, M and N only apply if test weights are provided for calibration.

```
    - SC DATA SCROLL 3I -
Pivot to test-weight
height          000.00 In
ENTER           +/-
```

If ENGLISH or MIXED:		**If METRIC:**	
Default:	**0.00 in**	**Default:**	**0.0 mm**
Min:	**-20.00 in**	**Min:**	**-500.0 mm**
Max:	**+20.00 in**	**Max:**	**+500.0 mm**

Parameter LC: Pivot to test-weight length. For weighbridges which do not have a pivot, enter zero.

```
    - SC DATA SCROLL 3L -
Pivot to test-weight
length          000.00 In
ENTER
```

If ENGLISH or MIXED:		**If METRIC:**	
Default:	**24.00 in**	**Default:**	**0 mm**
Min:	**0.00 in**	**Min:**	**0 mm**
Max:	**200.00 in**	**Max:**	**5000 mm**

Parameter LF: Pivot to carriage height. For weighbridges which do not have a pivot, enter zero.

- SC DATA SCROLL 3M -
Pivot to carriage
height 000.00 In
ENTER

If ENGLISH or MIXED:		If METRIC:	
Default:	**6.50 in**	**Default:**	**0 mm**
Min:	**0.00 in**	**Min:**	**0 mm**
Max:	**10.00 in**	**Max:**	**250 mm**

Parameter LG: Carry roll to carriage height. Measure to the center line of the weigh idler carry roll on troughing idlers, and to the top of the carry roll on flat belts. For weighbridges which do not have a pivot, enter zero.

- SC DATA SCROLL 3N -
Roll to carriage
height 000.00 In
ENTER

If ENGLISH or MIXED:		If METRIC:	
Default:	**6.50 in**	**Default:**	**0 mm**
Min:	**0.00 in**	**Min:**	**0 mm**
Max:	**20.00 in**	**Max:**	**250 mm**

Enter the number of load cells of your weighbridge.

- SC DATA SCROLL 3O -
# of load cells
1 U
ENTER

Default: **1**

Min: **1**

Max: **6**

12. Defining Dimensional Parameters of the Application

    Parameter LD: Idler spacing in scale area. For better accuracy, average the distance between the idlers across the scale on both sides. Measure to within 0.032 inch or 1 mm with the numeric keys and press ENTER.

```
    - SC DATA SCROLL 4 -
Idler spacing
36.00 In
ENTER
```

If ENGLISH or MIXED:		**If METRIC:**	
Default:	**36.00**	**Default:**	**1000 mm**
Min:	**2.00 in**	**Min:**	**50 mm**
Max:	**120.00 in**	**Max:**	**2500 mm**

Enter the angle of inclination of the belt conveyor. If an inclination compensator is connected to the scale, after this preliminary set up has been completed, enable the automatic angle detection in I/O definition (Main Menu 4) and calibrate the incline compensator.

```
    - SC DATA SCROLL 5 -
Conveyor's angle
0.0 Degrees
ENTER        +/-
```

Default: **0.00**

Min: **-25.00×**

Max: **+25.00×**

13. Defining the Load Cell(s)

    Enter the load cell capacity as it appears on the label placed on the load cell.

- SC DATA SCROLL 6 -
Load cell capacity
250 Lbs
ENTER

If ENGLISH or MIXED:		**If METRIC:**	
Default:	**250.0 Lbs**	**Default:**	**100 kg**
Min:	**1 Lbs**	**Min:**	**1 kg**
Max:	**15000 Lbs**	**Max:**	**5000 kg**

The sensitivity was entered when the belt scale code was entered. If other (0) was selected, enter the load cell sensitivity in mV/V as marked on the label of the load cell. Thermo load cells are normally 1.800 or 3.000 mV/V.

- SC DATA SCROLL 7 -
Load cell sens.
3.000 mV/V
ENTER

Default: **3.00 mV/V**

Min: **0.500 mV/V**

Max: **3.500 mV/V**

Load cell resistance is entered on this screen. The resistance for the load cell has been recorded on the System Data Sheet in the front of your belt scale manual. (It is also stamped on the load cell cable.) Enter the ohms for the load cell. The number of scrolls depends on the number of load cells specified in scroll 3O.

```
    - SC DATA SCROLL 8A -
Load cell #1 res
350.000 Ohms
ENTER
```

Default: **350 Ohms**

Min: **10 Ohms**

Max: **2000 Ohms**

If # of Load Cells is 2 or more:

```
        - SC DATA SCROLL 8B -
Load cell #2 res
350.00 Ohms
ENTER
```

Same default and limits of load cell #1.

If # of Load Cells is 3 or more:

- SC DATA SCROLL 8C -
Load cell #3 res
350.00 Ohms
Enter

Same default and limits of load cell #1.

If # of Load Cells is 4 or more:

- SC DATA SCROLL 8D -
Load cell #4 res
350.00 Ohms
ENTER

Same default and limits of load cell #1.

If # of Load Cells is 5 or more:

- SC DATA SCROLL 8E -
Load cell #5 res
350.00 Ohms
ENTER

Same default and limits of load cell #1.

If # of Load Cells is 6:

- SC DATA SCROLL 8F -
Load cell #6 res
350.00 ohms
ENTER

Same default and limits of load cell #1.

14. Defining the Speed Input

    The speed input screen allows the operator to select either speed sensor input (default value), or a simulated value using an internal timer.

    Simulation allows operation without a speed sensor. When simulated speed is selected, a conveyor running input is required (refer to the field wiring diagram).

```
    - SC DATA SCROLL 9 -
Speed input
> single <
CHOICE       ENTER
```

Default: **SINGLE**

Selections: **SINGLE, SIMULATED**

15. Defining the Calibration Test Duration

    Zero and Span calibrations are more accurate if executed on an entire belt revolution or multiple of it. Press either ACQUIRE or MANUAL, ACQUIRE is the recommended selection. For MANUAL, see Step 18.

```
    - CAL DATA SCROLL 11 -
Establish test
duration
ACQUIRE      MANUAL
```

    Select ACQUIRE. Acquire is the recommended selection.

    a. Acquiring the Test Duration

       When selecting FULL, use a 100 foot tape to measure the belt length to the nearest 0.1 foot. Reference a fixed point (an idler) on the conveyor when counting belt revolutions. See Determining Installation Parameters for the recorded conveyor belt length.

The PARTIAL (belt length measurement) selection enables the operator to acquire test duration without the entire belt length measurement.

ACQUIRE TEST DUR Choose belt length measurement method. FULL PARTIAL

FULL is the recommended selection.

If FULL is selected, continue with Step 16 below. If PARTIAL is selected, skip to Step 17.

Full Test Duration Acquisition

If FULL is pressed, the operator is asked to enter the length of one belt revolution. Enter the length recorded in Determining Installation Parameters. Measure belt length to the nearest 0.1 feet.

Enter length of one belt revolution. length 1000.0 Ft ENTER ABORT

If ENGLISH or MIXED:		**If METRIC:**	
Default:	**1000.0 Ft**	**Default:**	**200.0 m**
Min:	**1.0 Ft**	**Min:**	**0.5 m**
Max:	**10000.0 Ft**	**Max:**	**3000 m**

After the length of the belt has been entered, the system automatically moves to the following screen which prompts the operator to press START when the mark passes the reference point. Pressing ABORT returns the screen to Cal Data Scroll 11.

The belt must be running at the maximum speed before executing this function. If not, the prescaler will be improperly calculated.

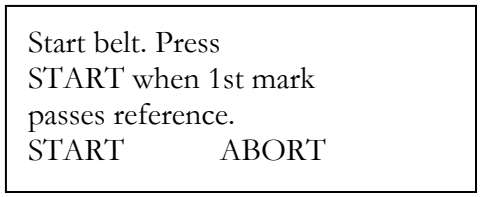

When START is pressed above, the system automatically moves to the next instructional screen. The operator presses COUNT each time the mark passes the reference point until minimum test load conditions are met (refer to belt scale installation manual for minimum test load requirements). When the last revolution passes the mark, the operator must press COUNT followed by pressing DONE.

Pressing ABORT returns the screen to Cal Data Scroll 11.

Zero Cal light illuminates indicating zero calibration is in progress.

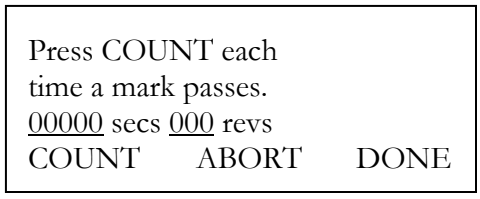

Pressing ABORT returns the screen to Cal Data Scroll 11.

When duration test is finished, the new values for length of belt and time are displayed. Press CONTINUE.

During the Acquire Test Duration, the Integrator performed an unassisted zero calibration and installed the new zero. Skip to Step 19.

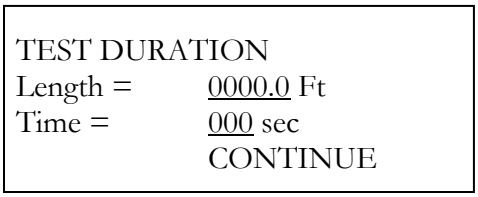

17. Partial Test Duration Acquisition

CAUTION. THIS OPTION SHOULD ONLY BE USED WHEN BELT LENGTH EXCEEDS 1000 FEET.

If PARTIAL is pressed, the operator is asked to enter the length between two marks on the belt.

Use a 100 foot tape measure to measure the largest possible amount of the belt to the nearest .01 ft. Locate and mark a reference point on the conveyor (or idler).

Pressing ABORT returns the screen to Cal Data Scroll 11.

Enter length between two marks on belt. Length: 200.0 Ft ENTER ABORT

If ENGLISH or MIXED:		**If METRIC:**	
Default:	**200.0 Ft**	**Default:**	**50.0 m**
Min:	**1.0 Ft**	**Min:**	**0.5 m**
Max:	**10000.0 Ft**	**Max:**	**3000.0 m**

After the length of the belt has been entered, the system automatically moves to the following screen which prompts the operator to press START when the mark passes the reference point.

The belt must be running at the maximum speed before executing this function. If not, the prescaler is improperly calculated.

Pressing ABORT returns the screen to Cal Data Scroll 11.

```
Start belt. Press
START when 1st mark
passes reference.
START          ABORT
```

When START is pressed above, the system automatically moves to the next instructional screen. Press COUNT when each mark passes the reference point until both marks have passed. Then press DONE.

Pressing ABORT returns the screen to Cal Data Scroll 11.

Zero Cal light illuminates indicating zero calibration in progress.

```
Press COUNT each
time a mark passes.
00000 secs 000 revs
COUNT     ABORT       DONE
```

When duration test is finished, the new values for length of belt and time are displayed. Press CONTINUE.

```
TEST DURATION
Length =      0000.0 Ft
Time =        000 sec
              CONTINUE
```

During the Acquire Test Duration, the Integrator performed an unassisted zero calibration and installed the new zero. Skip to Step 19.

18. Manual Entry of Test Duration

Prior to performing the Manual Test Duration, it is necessary to measure and time the conveyor belt. Using a 100 ft tape, measure the entire length of the conveyor belt to the nearest .01 ft. Place an easily identifiable mark on the conveyor belt (paint mark) and on a reference point of the conveyor (idler). Run the belt at full speed and carefully time one or more complete revolutions (in

seconds) of the belt. (Use a number of revolutions that will allow for a minimum test time of at least 6 minutes.)

This procedure allows direct entry of parameters that would otherwise be generated by the acquire Test Duration modes. This menu is generally used when the operator cannot see the belt while standing at the front panel.

If MANUAL is pressed, the system prompts the operator for running the belt at its maximum speed. Then press CONTINUE.

Pressing ABORT returns the screen to Cal Data Scroll 11.

Start belt. Press CONTINUE when belt is at maximum speed. ABORT CONTINUE

The operator is prompted to enter the length of one belt revolution.

Pressing ABORT returns the screen to Cal Data Scroll 11.

ENTER length of one belt revolution Length 000.0 FT ENTER ABORT

If ENGLISH or MIXED:		**If METRIC:**	
Default:	**200.0 Ft**	**Default:**	**200.0 m**
Min:	**1.0 Ft**	**Min:**	**1.0 m**
Max:	**10000.0 Ft**	**Max:**	**10000.0 m**

The number of belt revolutions to be timed is than entered.

Pressing ABORT returns the screen to Cal Data Scroll 11.

ENTER the number of belt revolutions to be timed 000 revs ENTER ABORT

Default: **1**

Min: **1**

Max: **100**

The next entry is the time required to complete the selected number of belt revolutions.

Pressing ABORT returns the screen to Cal Data Scroll 11.

ENTER the time for revolutions to pass reference 000 sec ENTER ABORT

Default: **30 sec**

Min: **1 sec**

Max: **16200 sec**

When ENTER is pressed, the system times the belt travel according to the above entered parameters.

Pressing ABORT returns the screen to Cal Data Scroll 11.

Zero Cal light illuminates indicating zero calibration in progress.

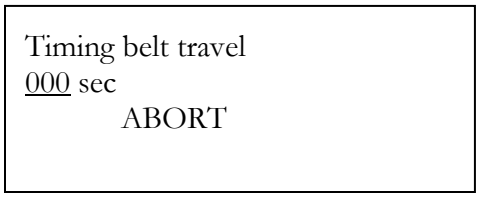

When test duration test is finished, the new values for length of belt and time are displayed. Press CONTINUE.

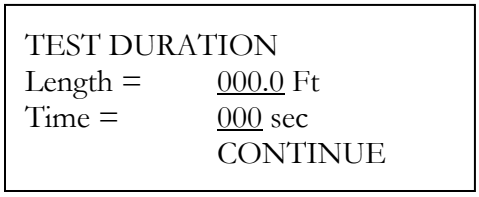

During Acquire Test Duration the integrator performed an unassisted zero calibration and installed the new zero.

19. Automatic Calibration of the Scale

After Test Duration has been determined, and the scale zeroed, the integrator performs an unassisted calibration of the scale. The scale is calibrated using the parameters just entered. After this, the R-CAL (electronic calibration resistor) is used to check the integrity of the load cell. During this time, the following screen is displayed:

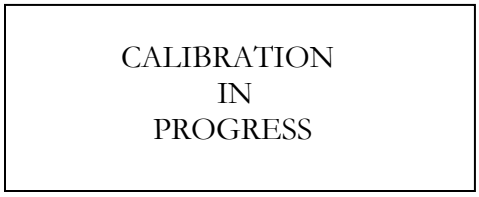

When calibration procedure is completed, the following message is displayed:

The Alarm light stops flashing and the Ready light illuminates.

The field data entered during this procedure enabled the Micro-Tech 2001 to perform an unassisted zero balance and span calibration. Assuming no mistakes were made, the scale is calibrated and is ready for use at this time.

NOTE. The span number was calculated from the data that was entered during this programming procedure. This span number is based on a perfect mechanical alignment of the scale and its adjacent idlers. Therefore verify this by performing a material span calibration or by performing a span calibration procedure (Main Menu 1 and Main Menu 2.)

In case the load cell is not connected or a failure is detected, the following message is displayed:

```
SCALE NOT CALIBRATED
Press RUN to start
or MENU for scrolls
```

The problem causing the calibration to be aborted must be corrected before attempting another calibration. The information entered previously is still in memory and should not have to be reentered. After the problem has been corrected, press MENU. Main Menu 1 should appear. If not, continue to press MENU until Main Menu 1 appears.

Proceed to Section 3.9, Main Menu 1, and conduct a zero calibration from Section 3.9.1 and a span calibration from 3.9.2. The scale is now calibrated using R-Cal as the simulated load. Press RUN to start or MENU for scrolls.

Chapter 3 Operation

Your Thermo Belt Scale System is capable of accurate weighing, provided it is installed, calibrated, operated, and maintained in complete accordance with the instructions contained in this manual, along with your scale frame installation manual.

Model 2001 Integrator is a micro-computer based instrument that accepts and conditions speed and weight signals and provides visual and electrical outputs for total weight and rate of flow. A stable 10 volt DC excitation voltage capable of exciting up to six strain gauge load cells is produced by the Integrator. Sense lead terminations are also provided for six wire load cell cable.

Auto Zero Track enables the belt scale system to automatically zero itself during extended periods when the conveyor belt is running empty. Auto Zero Track is menu selectable because some installations may not desire this option. A "Z" will appear on the second line of the display to indicate the selection of this option.

Life expectancy of the RAM support battery is approximately ten years, if power is not applied. Under normal operation where power is on continuously, life expectancy will be much longer.

Errors may occur during initial calibration and their reason must be corrected during initial calibration. During normal operation, an error would most likely indicate a failure in the system or improper operation.

Front Panel

The front panel contains the necessary status indicators and keys to enable the operator to perform calibrations and all required operations after the integrator has been configured in Section 2.5.

Front panel operation, zero calibration and span calibration is described in this chapter. A detailed description of all menus and their contents can be found in Appendix A/3.

LED Status Indicators

The five red status indicators show the status of the integrator.

1. Zero Calibration in progress.
2. Span Calibration in progress.
3. Alarm pending.
4. Batch or Load Out running.
5. Ready (power on, no alarm, no calibration running).

Figure 3-1. Model 2001 Integrator Front Panel

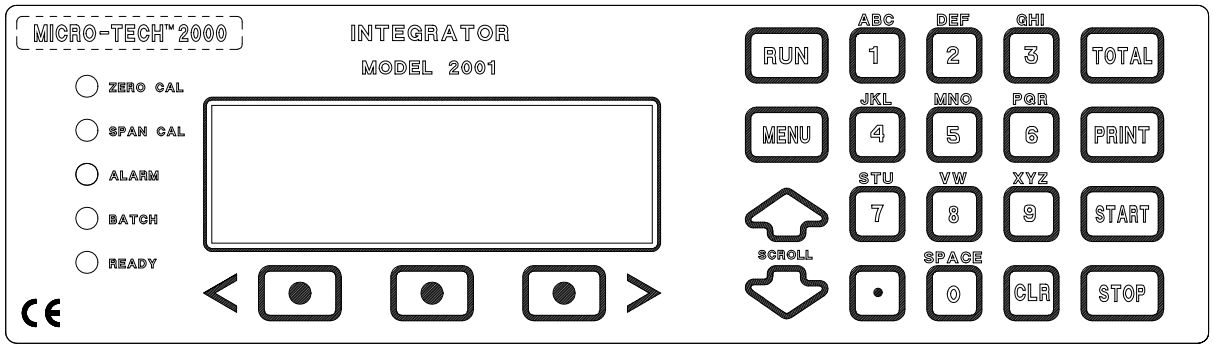

A00554

1. Run - Access the Run Menu. Returns integrator to Run Mode whenever pressed, see Section 3.5 for detailed description.
2. Menu - Permits entry to menus, see Section 3.4.
3. Up and Down Arrow - Scrolls up or down in the selected menu.
4. Soft Keys - Select displayed function directly above the key. Moves cursor left and right during string editing.
5. Alpha/Numeric Keys 1 through 0 - Enter numerals and letters when string editing. Similar to telephone keys.
6. Decimal Point Key - Enters decimal point.
7. Clear Key - Removes wrong entries prior to pressing ENTER soft key.
8. Total - Displays Master total, Reset total and Operator total. Operator and Reset total may be reset, see Section 3.6 for detailed description.
9. Print - Starts printout. COMM option is required, see Appendix A/3 for detailed description.
10. Start - Starts load out. Restart if interrupted.
11. Stop - Interrupts load out. Aborts load out if already interrupted.

NOTE. Stop keys are only active with Load out option.

Display

The four line display indicates actual running information or displays menu entry information.

Menu Displays

The integrator is a menu driven machine that allows the operator to access all setup, test and calibration parameters. Main Menu screens 1 through 6 can be accessed at anytime by pressing the MENU key until the desired menu screen is displayed. Menu scrolls may be selected by pressing the soft key directly below the desired scroll, and then using the Up/Down scroll key.

If the integrator is password protected, the appropriate password must be entered prior to making changes or performing routine calibration. Menus may be viewed without entering a password, but no entries are allowed unless the password is entered.

Optional menu scrolls are only available if the available option has been installed. The following screens are activated by the MENU key. See Appendix A/3 for a detailed description of all menus.

```
        - MAIN MENU 1 -
Press MENU for more
ZERO        SPAN        MAT'L
CAL         CAL         CAL
```

```
        - MAIN MENU 2 -
Press MENU for more
                SCALE       CALIB
DISPLAY         DATA        DATA
```

```
        - MAIN MENU 3 -
Press MENU for more

PROT        DIAG        TEST
```

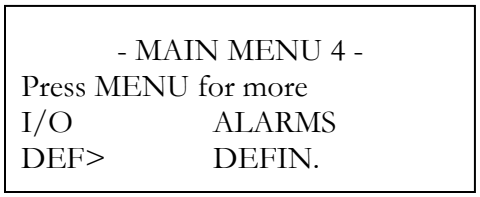

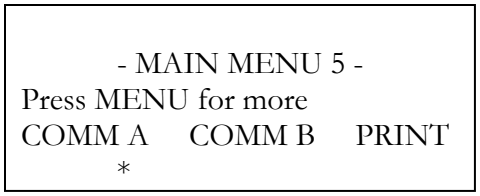

*Can be AB RIO or PRO DP

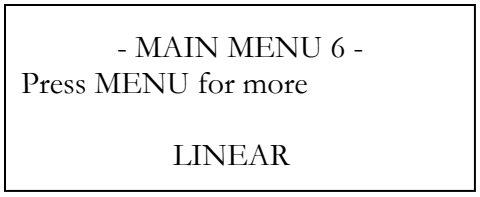

Normal Power On

When the Integrator is powered on after initial programming, the RUN Menu is displayed unless the hardware configuration has been changed.

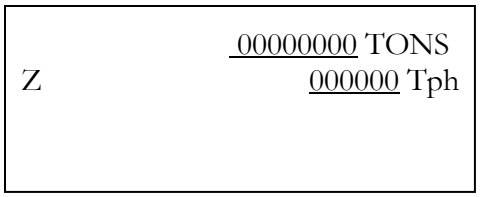

Hardware Configuration

If the hardware configuration detected at power on differs from the one recorded in memory, the following screen is displayed. This only happens if a circuit board has been added or removed during power off, or a board has failed.

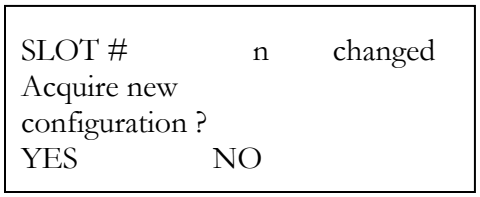

The screen disappears after 10 seconds if the question is not answered. The Integrator assumes the answer is NO. "HW CONFIG. CHANGED" alarm is on and cannot be reset. The above screen appears each time power is cycled.

If a board is removed or added, and this is a permanent change in configuration, answer YES.

1. A board is removed and is not replaced:

   The Integrator cancels from memory the setup data of the board that is removed. If the board is added again, the setup data for the board has to be entered again.

2. A board is added:

   The Integrator acquires the new hardware configuration. Setup data for the new board must be entered.

If the reason for the message is not known, or if the change in configuration is temporary and the operator does not want to lose the original setup, answer NO.

1. A board is removed:

   The Integrator resumes operation, retaining setup data of the board that was removed. All other boards continue working normally. No change occurs in I/O Definition.

2. A board is added:

   The Integrator resumes normal operation without recognizing the new board.

   If NO is pressed, the "HW CONFIG. CHANGED" alarm stays on.

Run Menu

When the integrator is normally powered on after initial programming, the Run Menu is displayed. The Run Menu can always be accessed by pressing the RUN key on the front panel at any time.

Main Run

The Run Menu consists of two operations, main Run Menu and Reset Total Menu. They can be scrolled using the scroll UP or DOWN keys.

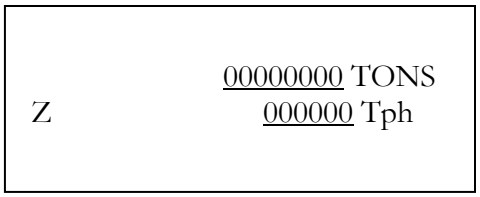

The first line always displays the MASTER TOTAL, which is the number of tons totalized by the scale since installation. This number cannot be cleared.

The second line always displays the rate. A "Z" appears on the left side if the "Auto Zero Tracking" optional function is enabled in Main Menu 2 (Calibration Data Scroll) and the scale is unloaded. The "Z" is not flashing during the first half test duration, while the integrator is checking that the belt is really unloaded. Then, during a full test duration, the "Z" is flashing, indicating the integrator is averaging the signal from the load cell to accurately rezero the scale. The load must stay below the AZT max deviation setpoint during the cycle, otherwise auto zero is aborted.

The third line is by default blank, but can be programmed to show either the belt speed, the belt loading or the date and time (if the optional COMM board is installed). The selection is made in Main Menu 2 (Display Scroll).

Reset Total

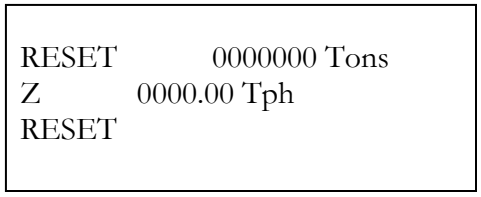

The Reset Total Menu is similar to the main Run Menu except Master Total has been replaced by Reset Total. Press the DOWN scroll key for access.

When the RESET key is pressed, the following screen is displayed:

```
Do you wish to clear
RESET total?

YES              NO
```

Press YES to clear the total. Press NO to skip clearing.
Material Calibration

Material Calibration

The word MAT'L flashes in the left soft key position after a material calibration if the static scale reference weight is not known. When the reference weight is known, press the MAT'L soft key to resume and complete the material calibration procedure.

Alarm Pending

The message ALARM appears in the right soft key if an alarm is pending. The alarm LED also is flashing.

The following menu is displayed after pressing the ALARM soft key.

```
ALARM          NEW
xxxxxxxxxxxxxxxxxxxxxx
MM-DD-YYY          HH:MM
RESET              NEXT
```

The keyword "NEW" indicates an alarm that has not been acknowledged yet. When the operator presses the RESET key to clear the alarm, the alarm disappears only if the reason that caused the alarm to occur does not exist any more. If the alarm is still pending, the keyword "ACK" is displayed instead of "NEW".

The third line shows the date and time only if the optional COMM board is installed.

The NEXT key is used to scroll between the pending alarms. The string "xxxxxxxxxxxxxxxxxxxx" stands for one of the following alarm conditions.

1.	**Clock Fail**
2.	**Load Cell Fail**
3.	**Ram Fail**
4.	**Rom Fail**
5.	**Speed Sensor**
6.	**High Load**
7.	**Low Load**
8.	**High Rate**
9.	**Low Rate**
10.	**High Speed**
11.	**Low Speed**
12.	**Warm Start**
13.	**Cold Start**
14.	**Power Down Calibrate**
15.	**Calibrate Time**
16.	**External Alarm 1**
17.	**External Alarm 2**
18.	**External Alarm 3**
19.	**Overflow Totalizer**
20.	**AZT Limited**
21.	**Batch Deviation**
22.	**BCD Error**
23 through 28	**Hardware Configuration Changed**
29.	**Math Error**
30.	**Printer Error**
31.	**Communication Error**
32.	**Allen-Bradley R. I. O. Error**
33.	**PROFIBUS-DP Error**
34 through 39	**Not Assigned**

Refer to Chapter 4.0, Maintenance, for more information.

Total Key

The TOTAL key accesses menus that contain detailed information for Master Reset and Operator total tons counters.

Master cannot be reset. Reset can be reset at will without password, and Operator can be reset at will with password.

Press the TOTAL key for access and scroll up or down. Pressing RUN returns to the Run Menu.

```
RESET TOTAL
   SINCE                00-00-0000
                        00000000 Tons
RESET
```

Password: Not Required

The second line (1) is only displayed if the optional COMM board is installed, and indicates the last date when the Reset Total was cleared.

The RESET key allows the operator to clear the Reset Total. No password is required for this action.

The next screen is very similar to the previous one, only the Master Total is displayed instead of the Reset Total. The RESET key is not displayed here since the Master Total cannot be cleared.

```
MASTER TOTAL
   SINCE                00-00-0000
                        0000000 Tons
RESET
```

A load out total can also be displayed if the Load Out optional board is installed.

When the RESET key is pressed, the following screen is displayed:

```
Do you wish to clear
xxxxxx total?

YES              NO
```

xxxxxx can be RESET or OPERATOR. Press YES to clear the total. Press NO to skip clearing.

Start-Stop Keys

Enabled only if loadout option is installed.

Calibration

Main Menu 1 contains the Calibration Menu. Menu 1 is selected by pressing the MENU key until Main Menu 1 appears. Desired calibration scrolls are selected by pressing the soft keys directly below the desired scroll.

```
          - MAIN MENU 1 -
Press MENU for more
ZERO          SPAN        MAT'L
CAL           CAL         CAL
```

Zero Calibrate Scroll

The zeroing process is implemented as a machine directed procedure.

1. Auto Zero

```
     - ZERO CAL -
Run belt empty, then
press START.
START         EXIT      MANUAL
```

Pressing the EXIT soft key returns the operator to Main Menu 1. Pressing MANUAL advances to Step 2 below. Pressing RUN at any time returns to the Run Menu.

The belt must be running during Auto Zero, since a complete zeroing procedure requires at least one full revolution of the belt to be averaged.

When START is pressed, the following screen is displayed.

```
AUTO ZEROING
Time remaining    0000
Rate:             000.00 Tph
Tot               000000 Tons
```

During Auto Zero, resolution of the total is ten times higher than normal. The number of seconds in Line 2 is calculated based on the current speed, and corresponds to the time remaining for completing the test. If the belt is not running at the moment the test is started or it is stopped during the test, a message is displayed, indicating the procedure has been aborted.

```
WARNING Belt stopped
Calibration aborted

EXIT
```

EXIT returns to Main Menu 1. When zero is reached, the system automatically displays the following screen.

```
AUTO ZERO COMPLETE
Error  ±000.00%
Change  zero?
YES          NO          ADV
```

The word "COMPLETE" is flashing. Pressing ADV changes from Error% to Accumulated Weight. The percentage of error is related to full scale capacity.

Pressing NO returns the screen to Main Menu 1 without changing the zero number.

When YES is pressed, the zero number is changed and the next screen is displayed.

ADV changes "Error%" to "Total XX.XX Tons."

```
ZERO # CHANGED
New zero #    00000
Old zero #    00000
RUN           MENU      ADV
```

ADV changes from "Old zero" to "Rate", to "Accumulated Weight", and to "Error %".

Press MENU to repeat Auto Zero calibration. Press RUN to return to the Run Menu.

2. Manual Zero

The Manual Zero procedure shows the zero constant and allows direct entry if known. Use the ENTER key to confirm the new number.

```
- MANUAL ZERO -
Rate    000.0 Tph
Zero # 00000
ENTER         EXIT  ADV
```

Password: Operator

Default: **40000**

Min: **0**

Max: **120000**

The ADV key is only displayed if Auto Zero Tracking option is enabled. The AZT function accurately tracks the zero of the scale by calculating an additional zero constant. The portion of zero due to AZT is not incorporated in the zero constant, but is shown separately.

When ADV is pressed, the system scrolls between Zero and AZT:

```
    - MANUAL ZERO -
AZT # ±000000
AZT % ±000000
ENTER          EXIT   ADV
```

Password: Operator

When the AZT is displayed, the ENTER key incorporates the AZT number into the Zero constant, so the displayed AZT number and percentage changes to zero.

Span Calibration Scroll

Three simulated load calibration options are available: R-Cal, Test Weights and Test Chain. Test Weights or Test Chains require additional hardware and handling equipment.

The system allows the operator to select which one of the three methods is to be used for routine calibration. The selection is made in Main Menu 2, CAL DATA Scroll 1.

1. Auto Span

    a. Starting an R-Cal Calibration

    Press the SPAN CAL soft key. The following screen is displayed.

```
        - AUTO SPAN R Cal -
Run belt empty, then
press START.
START          EXIT      MANUAL
```

Pressing the EXIT soft key or MENU control key returns the screen to Main Menu 1.

Press START to initiate R-Cal span calibration. There is no totalization for three seconds until the weight signal has stabilized. Go to Step D below.

b. Starting a Chain Calibration

Stop conveyor belt.

Press SPAN CAL soft key. The following screen is displayed.

```
        - AUTO SPAN Chain -
Press Start to begin
Chain calibration
START          EXIT     MANUAL
```

Password: Operator

Pressing EXIT returns to Main Menu 1.

If MANUAL is pressed, the following screen is displayed:

```
        - MANUAL SPAN -
Rate           xxx.xx Tph
SPAN #         XXXXXX
ENTER          EXIT          RUN
```

Password: Operator

Pressing EXIT returns to the previous screen (AUTO SPAN Chain).

Pressing RUN returns to the main run screen.

Manually change the SPAN number by entering in the desired value and pressing the ENTER soft key.

NOTE: This may result in an un-calibrated scale.

Pressing the START soft key will disengage the Master Tons counter.

When START is pressed, the following screen is displayed:

```
      - AUTO SPAN Chain -
Apply chain, then
press START.
START          EXIT
```

Password: Operator

Pressing EXIT returns the screen to Main Menu 1.

When START is pressed, the following screen is displayed.

```
      - AUTO SPAN CHAIN -
Run belt, then
press START.
START          EXIT
```

Restart conveyor belt and insure chain placement is proper.

Press START.

Go to Step D below.

c. Starting a Test Weights Calibration

Stop the conveyor belt.

Press the SPAN CAL soft key. The following screen is displayed.

```
   - AUTO SPAN WEIGHTS -
Press Start to begin
Weight calibration
START        EXIT       MANUAL
```

Password: Operator

Pressing EXIT returns to Main Menu 1.

If MANUAL is pressed, the following screen is displayed:

```
        - MANUAL SPAN -
Rate            XXX.XX Tph
SPAN #          XXXXXX
START           EXIT          RUN
```

Password: Operator

Pressing EXIT returns to the previous screen (AUTO SPAN WEIGHTS).

Pressing RUN returns to the main run screen.

Manually change the SPAN number by entering in the desired value and pressing the ENTER soft key.

NOTE. This may result in an un-calibrated scale.

Pressing the START soft key will disengage the Master Tons counter. If the "LOAD WTS" output has been selected in the I/O Definition Scroll, test weights are automatically loaded after START is pressed. Wait for test weights to be loaded prior to proceeding. The message displayed will be "Press START to load test weights."

When START is pressed, the following screen is displayed.

```
   - AUTO SPAN WEIGHTS -
Apply weight then
press START
START           EXIT
```

Password: Operator

Pressing EXIT returns the screen to Main Menu 1.

When START is pressed, the following screen is displayed.

- AUTO SPAN Weights -	
Run belt, then press START.	Password: Operator
START EXIT	

Restart the conveyor belt if it is not running and press START.

Go to Step D below.

d. Executing the Span Calibration

Whichever method has been used to start automatic span calibration, after START is pressed, the following screen is displayed.

NOTE. Entry point when REPEAT is pressed (see below).

AUTO SPANNING	
Time remaining	0000
Rate	000.00 Tph
Tot	000000 Tons

During Auto Span, the resolution of the total is ten times higher than normal. The time remaining shown in Line 2 is calculated upon the current speed, and it is based on the test duration. If the belt is stopped during the test, a message is displayed indicating the procedure has been suspended. No action is required from the operator at this stage, just wait until the test is completed.

e. Material Factor

This part of the procedure is only executed if a material calibration is done before, and the current simulated load method has no material factor installed.

NOTE: If a calibration with material has not been run before, or a new manual span entry is done, or this is not the first time the current simulated method is used, this section does not apply. Go to step f below.

It is very important to understand that when this procedure is executed, the system does not alter the span. The span is assumed to be correct because it was obtained from a test with material. The system acquires the Material Factor for the current calibration method instead. This means the integrator knows in the future how to use this method for correctly changing the system's span.

AUTO SPAN COMPLETE
Error +/-00.00 %
Unfactored Calcon
EXIT FACTOR REPEAT

The word "COMPLETE" is flashing. If EXIT is pressed, the system acknowledges the Material Factor is not used. The effect of this is the system does not ask for a material factor any more for this calibration method until a manual span entry is done. By pressing EXIT the operator tells the system that material factors is not desired, but wants to use the test results for changing the span number. After EXIT is pressed, go to Step F below. If REPEAT is pressed go to Step D above.

If FACTOR is pressed, the following screen is displayed.

R-CAL Matl FACTOR
New factor: 000.00 %
Change factor?
YES NO ADV

Can be R-CAL or WTS or CHAINS

ADV advances to Old factor and again to New factor. If NO is pressed, the Material Factor is set to 1.00 (see above), then go to Step F below.

If YES is pressed, the following screen is displayed.

R-CAL Matl FACTOR		
Old factor:	00.00 %	
New factor:	00.00 %	
RUN	MENU	REPEAT

Can be R-CAL or WTS or CHAINS

The REPEAT key returns the operator to Step D above. RUN and MENU can be used for ending the procedure. After this point is reached, the system does not proceed to the next section.

f. Recording New Span

The system calculates the new span based on the result of the test performed with the simulated method.

AUTO SPAN COMPLETE		
Error +/-00.00 %		
Change span?		
YES	NO	ADV

The word "COMPLETE" is flashing. Pressing ADV advances to Accumulated Weight, Cal Con, Material Factor and back to Error %. If the Material Factor is INVALID (never acquired before), it is not displayed.

If YES is pressed, the following screen is displayed.

SPAN # CHANGED		
Old span # 000000		
New span # 000000		
RUN	REPEAT	ADV

ADV changes from Error % to Accumulated Weight, Calcon, Old Span, Material Factor (only if not INVALID). REPEAT moves back to Step D above and calibration restarts.

If NO is pressed, the following screen is displayed.

```
SPAN UNCHANGED
Old span # 000000
New span # 000000
RUN        REPEAT        ADV
```

ADV changes from Error % to Accumulated Weight, Calcon, Old Span, and Material Factor.

REPEAT moves back to Step D above and calibration restarts. Please note the Old span and New span are shown equally. This is because no change to the span has been done.

g. Ending an Auto Span Procedure with Chains or Test Weights

In case of auto-span with chains or weights, after RUN is pressed, the following screen is displayed.

```
Remove chains (or weights)
before returning to
normal operation!!
RUN   MENU
```

Pressing RUN resumes totalization and moves to the RUN Scroll.

h. Ending an Auto Span Procedure with R-Cal

In case of auto-span with R-Cal, after RUN is pressed, the R-Cal relay is deenergized and the display is locked for three seconds.

2. Manual Span
If the span constant is known, the manual span procedure allows the operator to make a direct a change of span.

```
    - MANUAL SPAN -
Rate    000.0 Tph
Span # 0000000
ENTER       EXIT       RUN
```

Password: Operator

Default: **300000**

Min: **222223**

Max: **20000002**

The EXIT key returns the operator to Main Menu 1.

It is very important to note that entering the Manual Span sets the material factors to INVALID (if any). This means that the automatic span tests need to be run again after a manual span entry has been performed, in order to acquire the material factors again.

Material Span Calibration

Material span calibration is a machine directed procedure for calibrating the belt scale using actual material.

Pre-weighed or post-weighed material, having been weighed to a known accuracy on a static scale, passes across the belt scale. This procedure automatically adjusts the integrator span and factors all simulated load test Cal Cons if the operator prefers they be factored.

1. Material Calibration Procedure

   a. Starting the Test

      Press MAT'L CAL soft key and DOWN ARROW. The following screen appears.

```
MAT'L CALIBRATION
Run belt empty, then
press START.
START       MENU
```

The operator must run the belt for at least one minute or one belt revolution before proceeding. After START is pressed, the master weight totalizer is disengaged.

When START is pressed, the following screen appears.

```
Run quantity of
material over scale.

CONTINUE
```

Press CONTINUE to go to the next scroll and follow the test procedure.

b. Running the Test with Material

```
00000.0 Tons
0000.0 Tph
Press DONE to end
DONEABORT
```

During the material calibrate procedure, the resolution of total tons counted is ten times higher than normal.

Wait until all material has passed over the scale, then press DONE. Pressing ABORT forces the program back to the top of the MAT'L CAL Scroll.

c. Entering the Reference Weight

At the end of the test, the system asks the operator whether the (actual) weight of the material is already known.

```
0000.00 Tons
Ref. weight known?

YES          NO
```

Press NO if the reference (actual) weight will not be known for some time and the conveying systems need to be returned to run. If NO is pressed, the RUN screen appears. MAT'L will be flashing to remind the operator that the material test is incomplete.

Press MAT'L when the reference weight is known and enter in the following screen.

If YES was answered before, or if the MAT'L key had been pressed after NO, the following screen is displayed.

```
00000.00 Tons
Enter reference
weight 00.0 Tons
ENTER          ABORT
```

The operator has to enter the actual material weight in the same weight units as the integrator is setup for. Example: Convert pounds to the nearest hundredth (0.01) of a ton and enter if the integrator is set up for tenths (0.1) of a ton increments. Material calibration is running at ten times normal.

After the material weight is entered, press ENTER to confirm.

If ABORT is pressed, the information acquired during the test is lost and the system returns to Main Menu 1 screen.

d. Updating the Span Constant

After the amount of material has been entered, the following screen is displayed.

```
MAT'L CAL. COMPLETE
Error 000.00 %
Change span?
YES            NO          ADV
```

The word "COMPLETE" is flashing. Pressing ADV changes from Error % to Actual Difference of Total. Pressing NO moves to "Add reference weight to total".

e. Acquiring the Material Factors

If YES was pressed, the following screen is displayed confirming the new span constant was installed. At this point, the scale is calibrated to the actual material test.

```
SPAN # CHANGED
New span # 000000
Old span # 000000
RUN   MENUFACTOR
```

If FACTOR is pressed, the following screen is displayed.

```
MAT'L CALIBRATION
Automatic correction
to Material Factors
R-CAL        WTS        CHAIN
```

Of the three simulated load calibration methods, only the ones that have been already used are shown. It is not possible to calculate a material factor if a simulated test was not run before the material test. If none of the three was done, the FACTOR soft key in the previous scroll is not displayed.

If R-CAL or WTS or CHAIN is pressed:

```
R-CAL Matl FACTOR
New factor 000.00 %
Change factor?
YES          NO          ADV
```

Can be R-CAL or WTS or CHAINS

Pressing ADV advances to the Old factor and again to the New factor. YES goes to the next scroll. NO goes back to Step E above. Press YES if this specific simulated method of calibration has already been used and the related material factor will be recorded. By doing this, the system is able to execute accurate calibrations in the future with this simulated method. Press NO if the acquired material factor is not desired. If YES is pressed, the following screen is displayed.

R-CAL Matl FACTOR
Old factor: 00.00 %
New factor: 00.00 %
RUN MENU FACTOR

Can be R-CAL or WTS or CHAINS

The FACTOR key repeats for all simulated load test previously run. If RUN or MENU is pressed, the following screen is displayed.

f. Adding the Reference Weight to Total

MAT'L CALIBRATION
Add reference
weight to totals
YES NO

If YES is pressed, the amount of material used for the test is added to the master, reset and operator's totals. If the answer NO is selected, the information is lost.

NOTE. Moisture compensation is inhibited during material calibration. This is done to make the check of the totalized quantity easier. The static scale provides the weight of the material including moisture. The weight of the water is removed immediately before adding to total at the end of the procedure, so that the Master, Reset and Operator's totals are still covered.

Permanent Scroll Record – Setup Scrolls

MAIN MENU 1

ZERO SCROLL

Zero # _____

SPAN SCROLL

Span # _____

MAIN MENU 2

DISPLAY SCROLL

1. Measure Units _____
2. Totalization Units _____
3. Length Units _____
4. Rate Units _____
5. Loadcell Units _____
6. Language _____
9. Run Display, Line 3 _____
10. Damping Display Rate _____
11. Damping Display Load _____
12. Damping Display Speed _____

SCALE DATA SCROLL

1. Max. Scale Capacity _____
2. Scale Divisions _____
3. Belt Scale Code # _____
3A. Pivot to Load Cell _____
3B. Number of Weigh Idlers _____
3C. Pivot to 1st Idler _____
3D. Pivot to 2nd Idler _____
3E. Pivot to 3rd Idler _____
3F. Pivot to 4th Idler _____
3G. Pivot to 5th Idler _____
3H. Pivot to 6th Idler _____
3I. Pivot to Test Weight Height _____
3L. Pivot to Test Weight Length _____
3M. Pivot to Carriage Height _____
3N. Roll to Carriage Height _____
3O. Number of Load Cells _____
4. Idler Spacing _____
5. Conveyor's Angle Degrees _____
6. Load Cell Capacity _____

7.	Load Cell Sensitivity	_____
8A.	Load Cell #1 Resistance	_____
8B.	Load Cell #2 Resistance	_____
8C.	Load Cell #3 Resistance	_____
8D.	Load Cell #4 Resistance	_____
9.	Speed Input	_____
10.	Zero Dead Band Range	_____

CALIBRATION DATA SCROLL

1.	Calibration Mode	_____
2.	R-Cal: Resistance (Ohms)	_____
3.	R-Cal: Cal-Constant	_____
4.	Chain: Weight (Lbs/Ft)	_____
5.	Chain: Cal Constant	_____
6.	Total Test Weights (Lbs)	_____
7.	Weight: Cal-Constant	_____
8.	Calibration Interval Days	_____ Days
9.	Calibration Date	_____
10.	R-Cal: Mat'l Factor	_____
	Chain: Mat'l Factor	_____
	Weight: Mat'l Factor	_____
11.	Test Duration	Full Partial Manual
	Belt Length	_____
	Number of Revolutions	_____
	Test Time	_____
12.	Auto Zero Tracking	Yes No
12A.	Auto Zero Tracking Range	_____ %
12B.	Auto Zero Tracking Max. Dev.	_____ %
13.	Max. Speed Capacity	_____
14.	Number of Calib.	_____

MAIN MENU 3

PROTECTION SCROLL

1.	Protection Level	None Ltd Prot

DIAGNOSTICS SCROLL

1.	A/D Gross	_____
	A/D Net	_____
2.	Weight on Load Cell	_____
2A.	Load Cell Output Zero	_____
2B.	Load Cell Output Span	_____
3.	Prescale	_____
	Pulses/Minute	_____

3A.	Test Duration Total Pulses	
3B.	Test Duration Total Length	
4.	Service Password	
5.	Operator Password	
6.	Software Version	
9.	Board Type Slot #1	
10.	Board Type Slot #2	

MAIN MENU 4

I/O DEFINE SCROLL

1.	Current Output #1 Define	
	Current Output #2 Define	
1A.	Current Output #1 Range	mA
	Current Output #2 Range	mA
1B.	Current Output #1 Delay	secL
	Current Output #2 Delay	secL
1C.	Current Output #1 Damping	sec
	Current Output #2 Damping	sec
2.	Analog Input #1 Definition	
2A.	Moisture Input Calibrate	% V
2B.	Moisture Input Calibrate	% V
3.	Analog Input #2 Definition	
3A.	Conveyor Low Position	Degrees
3B.	Conveyor High Position	Degrees
4.	Digital Input Define	Physical

	Input	Status
External Alarm #1	/	
External Alarm #2	/	
External Alarm #3	/	
Print	/	
Belt Running	/	
Reset Total	/	
Reset Alarm	/	
Auto Zero	/	
Clip Detector	/	
Calibration Select 1	/	
Calibration Select 2	/	
Calibration Select 3	/	
Calibration Select 4	/	
Calibration Select 5	/	
Calibration Select 6	/	

Calibration Select 7		/
Calibration Select 8		/
Calibration Select 9		/
Calibration Select 10		/
5.	Digital Output Define	Physical Output Status
	Alarm	
	Shutdown	/
	Ready	/
	High Load	/
	Low Load	/
	High Rate	/
	Low Rate	/
	High Speed	/
	Low Speed	/
	Print Ready	/
	Totalizer	/
	Load WTS (Weights)	/
6.	Remote Counter Division	
7.	Remote Counter Pulse Width	
10.	Clip Detector Mode	
10A.	Clip Detector Length	
11.	Frequency Output #1 Define	
	Frequency Output #2 Define	
11A.	Maximum Frequency #1	
	Maximum Frequency #2	
ALARMS SCROLL		
1.	Rate Alarm	Yes No
1A.	Low Rate Set	% sec
1B.	High Rate Set	% sec
2.	Load Alarm	Yes No
2A.	Low Load Set	% sec
2B.	High Load Set	% sec
3.	Speed Alarm	Yes No
3A.	Low Speed Set	% sec
3B.	High Speed Set	% sec
4.	Low Speed Set	% sec
4A.	Belt Slip Set	% sec
5.	Alarm Set As	Alarm Shutdown None

#1 Clock Fail _____
#2 Load Cell Fail _____
#3 RAM Fail _____
#4 ROM Fail _____
#5 Speed Sensor _____
#6 High Load _____
#7 Low Load _____
#8 High Rate _____
#9 Low Rate _____
#10 High Speed _____
#11 Low Speed _____
#12 Warm Start _____
#13 Cold Start _____
#14 P.D. Calibrate _____
#15 Calibrate Time _____
#16 Ext. Alarm #1 _____
#17 Ext. Alarm #2 _____
#18 Ext. Alarm #3 _____
#19 Overflow Totalizer _____
#20 AZT Limit _____
#21 Batch Deviation _____
#22 BCD Error _____
#23 thru 28 HW Conf. Change _____
#29 Math Error _____
#30 Printer Error _____
#31 COMM Error _____
#32 Allen-Bradley RIO Error _____
#33 PROFIBUS-DP Error _____

LOAD OUT SCROLL

1. Preset Weight _____
2. Pre Act Correction _____
2A. Pre Act Value _____
2B. Pre Act Range _____
2C. Pre Act Length _____
3. Start Delay _____
4. Coasting Time _____
5. Batch Deviation _____
6. Print Batch _____
7. Position Batch Num. X=_____ Y=_____
8. Position Batch Quant. X=_____ Y=_____

9.	Position Batch Total	X= Y=
MAIN MENU 5		
COMM A SCROLL		
1.	Baud Rate Port #1	
2.	Set Parity Port #1	
3.	Stop Bits Port #1	
4.	Word Length Port #1	
5.	Protocol Port #1	
5A.	Clear to Send #1	
6.	Address Port #1	
7.	Access Prot Port #1	
8.	Baud Rate Port #2	
9.	Set Parity Port #2	
10.	Stop Bits Port #2	
11.	Word Length Port #2	
12.	Protocol Port #2	
12A.	Clear to Send #2	
13.	Address Port #2	
14.	Access Prot Port #2	
PRINT SCROLL		
1.	Handshaking	
2.	End of Line	
3.	Delay End of Line	
4.	Form Feed	
5.	Print Interval	
6.	Print Time #1	
7.	Print Alarms	
8.	Totals Report Format	
9A.	Number of Strings	
9B.	Contents String #1	
9C.	Position String Number #1	
9D.	Contents String #2	
9E.	Position String #2	
9F.	Contents String #3	
9G.	Position String #3	
9H.	Position Oper. Total	
9I.	Position Reset Total	
9J.	Position Master Total	
9K.	Position Date	
9L.	Position Time	

9M. Position Rate _____

9N. Position Avg. Rate _____

9P. Position Running _____

MAIN MENU 6

LINEARIZATION SCROLL

Linearization	Yes LOAD	No FACTOR
LIN Factor #1		
LIN Factor #2		
LIN Factor #3		
LIN Factor #4		
LIN Factor #5		

Permanent Field Record

Conveyor Number _____

Date _____

1. Scale Capacity _____(Tons Per Hour)
2. Belt Scale Code Number _____(Tons Per Hour)
3. Belt Scale Weighbridge Dimensions _____
   a. Pivot to Load Cell Distance _____(Inches)
   b. Number of Weigh Idlers
   c. Pivot to Weight Idler Distance (Inches
      1st _____ 4th _____
      2nd _____ 5th _____
      3rd _____ 6th _____
   d. Pivot to Test Weight Height _____ (Inches)
   e. Pivot to Test Weight Length _____ (Inches)
   f. Pivot to Test Carriage Height _____ (Inches)
   g. Pivot to roll to Carriage Height _____ (Inches)
4. Number of Load Cells _____ (Inches)
5. Idler Spacing _____ (Degrees)
6. Conveyor's Angle of Incline _____ (Pounds)
7. Load Cell Capacity _____ (Inches)
8. Conveyor Belt Length _____ (Feet)

Calibration Report

Calibration Report – Permanent Record: _____

Conveyor: _____

Date				
By				
Scale Capacity				
Belt Length				
Test Length				
Test Time				
Calib Constant				
R-Cal Static Chain				
Calibration Mode				
Zero – As Found				
Zero – As Left				
Span – As Found				
Span – As Left				

Chapter 4 Maintenance

The maintenance information in this manual should meet your service needs. If problems occur that require technical assistance, please call 1-800-445-3503.

Thermo Fisher Scientific has a repair center located at our plant in Minneapolis, Minnesota. Contact our Repair Representative at 800-445-3503 for assistance. To expedite your service request, please have your machine model and serial number available.

When returning parts for repair, please use the Return Material Authorization form located in the Replacement parts section of this manual.

Frequent Checkpoints

The Micro-Tech™ 2001 Integrator is a solid-state device, and as such, should require very little maintenance. The front panel can be wiped clean with a damp cloth, and if necessary, a mild detergent (never use abrasive cleaners, especially on the display window). As a preventative measure, check that all wires, plugs, and integrated circuits are tight in their connectors. Also keep the enclosure door tightly closed to prevent dirt infiltration.

More often than not, a quick visual inspection leads to the source of trouble. If a problem does develop, check the following before proceeding to more specific troubleshooting procedures.

1. Check Power

    a. Check that the two (2) Line Voltage Selector Switches are set to the correct line voltage (see "Mother Board Configuration Jumpers and Switches" on page 2-7).

    b. Check the fuses.

    c. Check that the power switch is ON and that power is supplied to the unit.

2. Check Connections

    a. Check that all terminations are secure.
    b. Check that the Display Module and Keyboard connectors are firmly seated in their connectors.
    c. Check that the Remote Counter and optional input/output modules are secure in their sockets.
    d. Check that all Jumpers are in their correct position.

Troubleshooting

This unit has built-in troubleshooting capabilities. A number of possible problems are automatically detected and screen messages are displayed. Also refer to the Diagnostics Test Scrolls in Main Menu 3.

Alarm Message

The ALARM message is assigned to the right hand soft key when an alarm is pending. The ALARM message and its LED flash at the same time.

The following screen is displayed when the right hand soft key is pressed.

```
ALARM          NEW
xxxxxxxxxxxxxxxxxxxxxx
MM-DD-YYYY     HH:MM
RESET          NEXT
```

The keyword "NEW" indicates an alarm that has not yet been acknowledged. When the operator presses the RESET key to clear the alarm, the alarm disappears only if the reason that caused the alarm to occur does not exist any more. If the alarm is still pending, the keyword "ACK" is displayed instead of "NEW".

The third line shows the date and time only if the optional COMM board is installed.

The NEXT key is used to scroll between the pending alarms. The string "xxxxxxxxxxxxxxxxxxxx" represents one of the following alarm conditions.

Alarms List

1. Clock Fail

    The system has detected a failure on the clock calendar circuit. This alarm only occurs if the optional COMM board is installed.

- Check the COMM board to see if it is properly inserted.
- Replace the COMM board.

2. Load Cell Fail

   The system has detected an error on the load cell signal.
   - Check the load cell connections.
   - Check the load cell(s).

3. RAM Fail

   The system has detected an error on the RAM checksum during the internal periodical test. The RAM (Random Access Memory) is used to store variables and set up data.
   - Replace the CPU board.

4. ROM Fail

   The system has detected an error on the ROM checksum during the internal periodical test. The ROM (Read Only Memory) is used to store the program.
   - Replace the CPU board.

5. Speed Sensor

   This message can only appear if the DUAL speed mode is selected. The system has detected a difference between the speeds of the two sensors, higher than the one specified in the ALARM menu.
   - Check the speed sensors.

6. High Load

   The belt load has been detected to be higher than the maximum belt loading entered in the ALARM SET UP MENU.

7. Low Load

   The belt load has been detected to be lower than the minimum belt loading entered in the ALARM SET UP MENU.

8. High Rate

   The rate has been detected to be higher than the maximum rate entered in the ALARM SET UP MENU.

9. Low Rate

   The rate has been detected to be lower than the minimum rate entered in the ALARM SET UP MENU.

10. High Speed

    The speed has been detected to be higher than the maximum speed entered in the ALARM SET UP MENU.

11. Low Speed

    The rate has been detected to be lower than the minimum speed entered in the ALARM SET UP MENU.

12. Warm Start

    The system has detected a power loss condition, or power was removed for an undefined period of time.

13. Cold Start

    The system has detected the loss of the set up data after power was removed. The instrument needs to be set up and calibrated.

    - Replace either the mother board or the battery.

NOTE. The message COLD START never appears on the screen. This is because a Cold Start forces a start up procedure to be executed, and the alarm itself is cleared after the set up is completed. However, the alarm LED and the digital output will be showing an alarm during the initial set up procedure.

14. P.D. Calibrate

    When the system is powered off while a calibration sequence is in progress, the scale may not be properly calibrated.

    - Check calibration.

15. Calib Time

    If a calibration check time period is entered and the time expires, this alarm occurs. The purpose is to remind the operator that the calibration has not been checked for a considerably long period of time.

    - Check calibration.

16. Ext. Alarm 1

    Digital inputs can be programmed to detect external alarm conditions such as emergency switches, max level switches or other. This alarm is associated to the external alarm #1.
    - Check external alarm #1.

17. Ext. Alarm 2
    Check external alarm #2.

18. Ext. Alarm 3
    Check external alarm #3.

19. Overflow Tot.

    This message indicates the output pulse generator for the remote mechanical totalizer has reached an overflow condition. The rate may be too high or the pulse divider has been set too small.
    - Check the rate.
    - Check and eventually increase the pulse divider.

    This message is also displayed if the Master Total rolls over.

20. AZT Limit

    The Auto Zero Tracking function has reached the maximum limit of tare that is allowed to be automatically cleared. The scale may be dirty or misaligned.
    - Check and clean the scale.
    - Perform an autozero.

21. Batch Deviat.

    This alarm is only visible if the optional Load Out board is installed. It is generated when a batch is run and the error detected at the end of the batch is higher than specified.
    - Check the parameters of the load out.
    - Adjust the preact value.

22. BCD Error

    This message is only displayed if the optional BCD output board is installed. If the variable to be converted in the BCD format has more than 4 digits, the alarm is generated.
    - Check the size of variables and the BCD data setup.

23. and

24. HW Conf. Changed (Slot 1 or Slot 2)

    When a new board is installed or an old board removed, this message appears. Refer to Appendix A/3, Section 3.4.2, number 7 of this document (normal power on).

25. Math Error

    A divide by zero or overflow error is encountered during internal calculations. This message indicates some abnormal dimensional parameter is entered in setup.
    - Check setup data.

26. Printer Error

    This message is displayed if the system has data to print and the printer is disconnected or the paper feed is empty.

27. Communication Error

    This message is only displayed if the optional COMM board is installed. It indicates that a time out or handshake error is detected during a data transfer on the COMM line.
    - Check the COMM line connections.
    - Check the COMM line setup data.

28. Allen-Bradley Remote I/O COMM Error

    This message is displayed if communication is interrupted. The green LED on the A-B RI/O board will be flashing. The alarm does not come on if communication has never started.

29. PROFIBUS-DP COMM Error

    This message is only displayed if the optional PROFIBUS board is installed. The following two conditions activate the alarm.
    a. If the Siemens SPC3 controller installed on the PROFIBUS interface board does not recognize any successful data transfer within the watch dog timer interval.
    b. If the received data contains errors (value overlaps limits, register number does not exist, group number does not exist).

Cold Start

It may be necessary to cold start the Micro-Tech 2000 in the event the software becomes corrupted. You have the option of installing the factory default constants or simply returning the Micro-Tech 2000 to its previous running state.

There are two methods of forcing a cold start via the front panel: in RUN mode or from the DIAGNOSTIC SCROLL.

1. To force a cold start from RUN MODE:

   Press and hold in at the same time the LEFT HAND ARROW key and the CLEAR key until the following screen is displayed.

```
Install Factory
Defaults?

NO              YES
```

   Pressing NO returns the Micro-Tech 2000 to the RUN mode.

   If YES is pressed, the following screen is displayed.

```
     - MEMORY ERASED -
Choose the language
key to continue to
ESP                   USA
```

   When the above screen is displayed, all field entry data has been replaced by the factory default constants. Proceed to Initial Setup Procedure, "Programming the Micro-Tech 2001 Integrator" on page 2-25

NOTE. If the software corruption was catastrophic and the memory would not erase in the above step, do the following: Press and hold in the LEFT HAND ARROw key and the CLEAR key. While holding in both keys, cycle line power. In the even the MEMORY ERASED screen does not appear, consult the Factory.

2. To force a cold start from the DIAGNOSTIC SCROLL:

   Press MENU until MAIN MENU 3 is displayed, then press the DIAG soft key. Press the down arrow key until the following screen is displayed.

```
   - DIAGNOST. SCROLL 15 -
Force cold start

ENTER
```

   When you press ENTER, the following screen is displayed:

```
        ATTENTION
      ARE YOU SURE?

YES            RETURN
```

   Pressing RETURN will return to DIAGNOSTIC SCROLL 15.

   Pressing YES displays the following screen:

```
Install Factory
Defaults?

YES            RETURN
```

   Pressing RETURN will return to DIAGNOSTIC SCROLL 15.

   Pressing YES clears all field entry data and installs factory default constants. The following screen is displayed:

```
      - MEMORY ERASED -
Choose the language
key to continue to
ESP
```

   Proceed to Initial Setup Procedure, "Programming the Micro-Tech 2001 Integrator" on page 2-25.

Internal Test Procedure

Pressing START on the screen (located in Main Menu 3) enacts a self-test of the internal microprocessor.

```
- TEST SCROLL 2 -
Internal test of
microprocessor.
START
```

Password: Service

After START is pressed, the following screens are displayed in sequence.

```
- TEST SCROLL 2A -
Testing ROM
Test PASSED
```

```
- TEST SCROLL 2B -
Testing RAM
Test PASSED
```

The message "Test PASSED" is displayed if the test runs correctly. If something wrong is detected, then the message "Test FAILED" is displayed, and the soft key CONTINUE is shown. The operator has to press the key to go on to the next test.

If the internal test has failed, call Thermo's Customer Service Department.

Load Call Excitation and Signal Voltage

1. Measure excitation voltage across terminal 20 positive and 21 negative in the scale junction box. This should be 10 VDC +/- 5%.

2. If the excitation voltage is incorrect, then measure the excitation voltage in the Integrator across terminal TB3-4 negative and TB3-3 positive. This should be 10 VDC +/- 5%.

3. Measure DC millivolt signal voltage across terminal 22 positive and 23 negative in the scale junction box. This should be within 0-30 millivolts DC (3mV/V load cell).

4. Measure DC millivolt signal voltage across terminal TB3-1 positive and TB3-2 negative in the Integrator. This should be the same as Step 3 above.

5. The millivolt output is in direct relation to weight applied. As weight is increased, output should increase.

Resetting Master Total Procedure

Steps required to reset master total or to reset remote counter overflow are given below.

1. If No Password is Installed

    a. Select Main Menu 3.
    b. Press DIAG soft key and scroll down to the Service Password screen.
    c. Type in a password (Example: 123) and press ENTER.
    d. Re-enter the password and press ENTER.
    e. Select Main Menu 3.
    f. Press PROT scroll and press PROT soft key.
    g. Press the NONE soft key.
    h. Type in password 7832500 and press ENTER. The protection level should be Ramsey.
    i. Press the TOTAL key on the touch panel. Scroll up or down if needed to reach the Master Total screen.
    j. Press the RESET soft key and answer YES to Reset Master Total?
    k. Select Main Menu 3. Press the DIAG soft key and scroll down to Service Password.
    l. Press ENTER twice, erasing the password installed in Step 3.
    m. Press the RUN key to return to normal operation.

2. If Password is Already Active

    a. Select Main Menu 3.
    b. Press the PROT scroll and press the PROT soft key.
    c. Press the NONE soft key.
    d. Type in password 7832500 and press ENTER. The protection level should be Ramsey.
    e. Press the TOTAL key on the touch panel. Scroll up or down if needed to reach the Master Total screen.
    f. Press the RESET soft key and answer YES to Reset Master Total?

g. Select Main Menu 3.
h. Press the PROT scroll and choose the password level desired.

Remove a Forgotten Password

1. Select Main Menu 3.
2. Press the PROTECT scroll and press the PROT soft key.
3. Press the NONE soft key.
4. Type in password 7832500 and press ENTER. The protection level should be Ramsey.
5. Press NONE.
6. Select Main Menu 3.
7. Press the DIAG soft key and scroll down to Service Password.
8. Press ENTER twice. The display should respond with New Password Acquired.
9. Scroll down to Operator Password. Press ENTER twice. The display should respond with New Password Acquired.
10. Select Main Menu 3. The PROT soft key should not appear, indicating all passwords have been erased. If PROT should appear, repeat Steps 1 through 9.
11. See Appendix A/3, Section 5.0 for entering new passwords.

Lithium Battery Replacement

The Micro-Tech volatile memory backup battery can be replaced without any special tools. See Figure for battery location on the mother board.

WARNING. DANGER OF EXPOSION IF BATTERY IS INCORRECTLY REPLACED.

Replace only with same or equivalent type recommended by Thermo. Dispose of used battery according to manufacturers instruction on battery or return to Thermo. See Disposal of Hazardous Waste below.

1. Record all configuration, setup and calibration data before removing battery. All information is lost when the battery is removed.
2. Turn the Micro-Tech power off at the mains.
3. Remove the battery from its compression socket. Observe the polarity markings on the battery socket base before inserting the new battery.
4. The lithium battery is .3 V, 1.2 AH, 2/3 A, Thermo part number 037188.

5. Insert battery.
6. Restore power to the Micro-Tech.
7. Cold start the Micro-Tech. See cold start procedure, Cold Start.
8. Re-enter all data recorded in Step 1.

Disposal of Hazardous Waste

Disposal of Lithium batteries and soldered printed circuit boards should be in accordance with your local Hazardous Waste Policy.

As an alternative, you may return product supplied by Thermo, freight prepaid for disposal. Contact our repair department for a Return Authorization Number before shipping any product for disposal.

Cleaning Instructions

The Micro-Tech 2001 Integrator is a solid-state device, and as such, should require very little maintenance. The front panel can be wiped clean with a damp cloth, and if necessary, a mild detergent (never use abrasive cleaners, especially on the display window). As a preventive measure, check that all wires, plugs, and integrated circuits are tight in their connectors. Also keep the enclosure door tightly closed to prevent dirt infiltration.

Figure 4-1. Model 2001 Mother Board

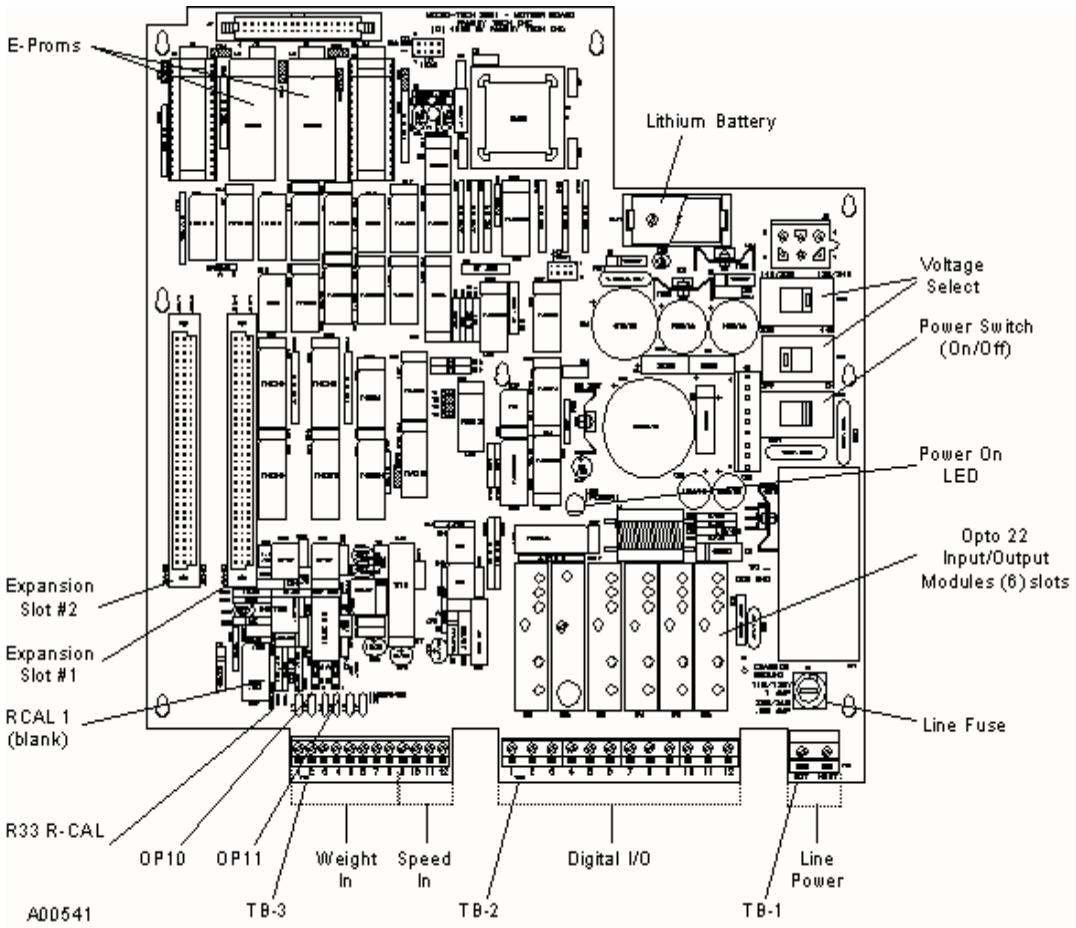

Parts Ordering Information

Chapter 5 Service, Repair and Replacement Parts

This chapter provides information about service, repair, and replacement parts for your Thermo Fisher Scientific product. It includes the telephone numbers for various departments at Thermo, the procedure for ordering replacement parts, a Return Material Authorization Form (RMA) and any parts lists are also included in this chapter.

The maintenance information in this manual is designed to meet your service needs. If you should encounter a problem that requires technical assistance, you may call Thermo Product Service at (800) 445-3503.

Thermo also provides on-site service technicians to assist customers with installation, setup, initial calibration, customer training, maintenance, and repair. Contact the Thermo Field Service department at the number given below for current rates and scheduling.

Thermo has repair centers located at the plant in Minneapolis, Minnesota. Products that need system checkout or repair can be returned to the plant with the Return Material Authorization (RMA) form. Contact our Repair and Return department (800) 445-3503 to get the form.

NOTE. Have your machine model number and serial number available when you call.

Main Switchboard: (763) 783-2500
FAX: (763) 783-2525
Service: (800) 445-3503
Return Material Authorization & Repair: (800) 445-3503
24 x 7 phone support
Or any local Thermo Fisher Scientific office.

For the fastest service when ordering parts, telephone or FAX the Thermo Parts Department at the numbers given

below. Your regional field service representative can also assist you with parts orders.

The recommended procedure for ordering parts is:

1. Determine the broken or faulty part.

2. Locate the part in the Parts List.

3. Find the part number(s) for the item(s) you need.

4. Before you contact Thermo for your parts, make sure you have the following information:

- Machine model and serial number
- Purchase Order number
- Date Required
- Preferred shipping method
- Part number(s), description, and quantity needed.

Telephone or FAX:

Thermo Fisher Scientific

Customer Service Department
501 90th Ave. NW
Minneapolis, MN 55433

FAX: (763) 783-2525

Phone: (800) 445-3503

Return Material Authorization and Repair: (800) 445-3503

E-mail:

Service.W&I.mpls@thermofisher.com

Parts.W&I.mpls@thermofisher.com

Phone/Fax Contacts for Thermo Fisher Scientific Offices

Australia
+61 (0) 8 8208-8200
+61 (0) 8 8234-3772 fax

Canada
+1 905-888-8808
+1 905-888-8828 fax

Chile
+56 2 378 5080
+56 2 370 1082 fax

China
+86 8008105118
+86 (0) 2164451101 fax

Germany
+49 (0) 208-824930
+49 (0) 208-852310 fax

India
+91-22-4157-8800
+91-22-4157-8801 fax

Italy
+39 02-959514-1
+39 02-953200-15 fax

Mexico
+52 55 1253 9410
+52 55 1253 9424 fax

South Africa
+27 (0) 11-609-3101
+27 (0) 11-609-3110 fax

Spain
+34 91-484-5965
+34 91-484-3597 fax

United Kingdom
+44 (0) 1452-337800
+44 (0) 1452-415156 fax

United States
+1 (800) 445-3503
+1 (763) 783-2525 fax

Parts List

Equipment	Part Number
Chassis Assembly, with 1 analog output	050100
PCBA, Mother board	048426
PCBA, Analog Output (1 out)	071637
PCBA, Analog Output (2 in/2 out)	071636
PCBA, COMM "A" Select 1 only	068053
RS-232C	
RS-485, std. (point to point)	
RS-485, multi-drop	
20 mA (digital) current loop	
PCBA, LED Assembly	046847
PCBA, Display Assembly	046860
PCBA, Touch Panel Model 2001	048651
PCBA, Allen-Bradley RI/O	055517
PCBA, Profibus-DP	056713
Fuse, Slo-Blo, .5 Amp (F1 220V) (Type T)	001366
Fuse, Slo-Blo, 1.0 Amp (F1 110V) (Type T)	002443
Battery, Lithium, 3.0 V, 1.2 AH, 2/3 A	037188
Transformer, Power	046863
Module, Power Input 12-32 VDC	044551
Module, Power Input 90-140 VAC	038014
Module, Power Input 180-280 VAC	050480
Module, Power Output 5-60 VDC	039669
Module, Power Output 24-280 VAC	037289
Module, Power Output (DRY-read Relay)	044552

Disposal of Hazardous Waste

Disposal of lithium batteries and soldered printed circuit boards must be in accordance with your local Hazardous Waste Policy.

As an alternative product supplied by *Thermo* may be returned freight pre-paid, for disposal. Contact the Repair Department for a Return Material Authorization Number before shipping any product for disposal.

Appendix A Weighbridge Physical Parameters

This appendix contains a listing of all weighbridges manufactured by Thermo Fisher Scientific. Each weighbridge is assigned a code number to be entered during initial programming of the Integrator. This code number defines the selected Weighbridge's default parameters and enables the Integrator to calculate span calibration constants (Calcon) for simulated calibration modes selected.

Weighbridge physical parameters can be altered by pressing the soft key DETAIL in Scale Data Scroll 3. Scroll down to the desired parameter and enter in the correct factor. Cal-Con's are calculated.

Weighbridges not manufactured by Thermo Fisher Scientific can be defined by entering code number 0 and pressing DETAIL in Scale Data Scroll 3. Scroll down and enter the weighbridge parameters in scroll positions 3A through 8F.

Physical parameters and typical scale models are as follows:

Table A- 1. Weighbridge Physical Parameters

SCALE DATASCROLL POSITIONS	PARAMETER
3	Belt Scale Code #
3A	(LA)Pivot to Load Cell Distance
3B	(IDL)No. of Weigh Idlers
3C	(LB1)Pivot to 1st Idler Distance
3D	(LB2)Pivot to 2nd Idler Distance
3E	(LB3)Pivot to 3rd Idler Distance
3F	(LB4)Pivot to 4th Idler Distance
3G	(LB5)Pivot to 5th Idler Distance
3H	(LB6)Pivot to 6th Idler Distance
3I	(LE)Pivot to Test Weight Height
3L	(LC)Pivot to Test Weight Length
3M	(LF)Pivot to Carriage Height
3N	(LG)Carry Roll to Carriage Height
3O	No. of Load Cells
4	(LD)Idler Spacing
5	Conveyor's Angle Degrees
6	Load Cell Capacity Pounds
7	Load Cell Sensitivity mV/V
8A	Load Cell No.1 Resistance ohms
8B	Load Cell No.2 Resistance ohms
8C	Load Cell No.3 Resistance ohms
8D	Load Cell No.4 Resistance ohms
8E	Load Cell No.5 Resistance ohms
8F	Load Cell No.6 Resistance ohms

Figure A- 1. Typical Weighbridges

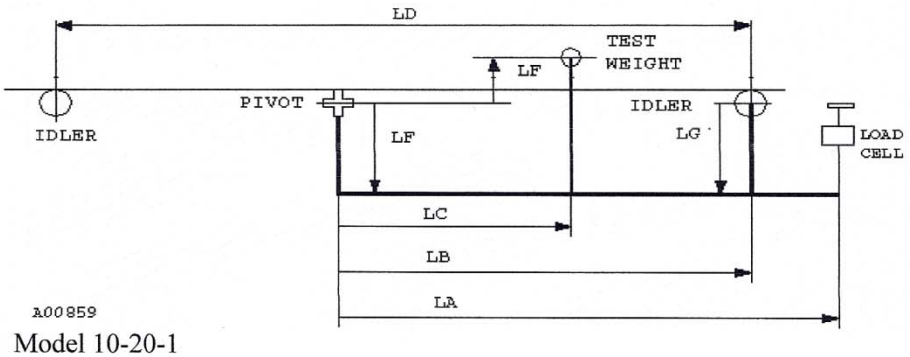

Model 10-20-1

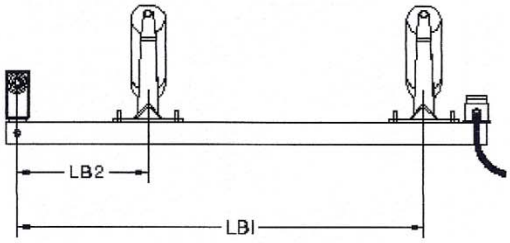

Model 10-22

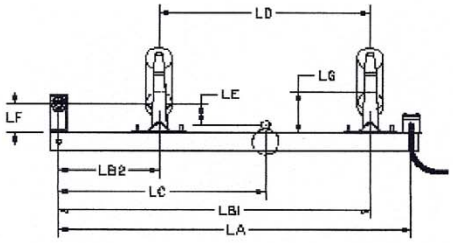

Model 10-17-2

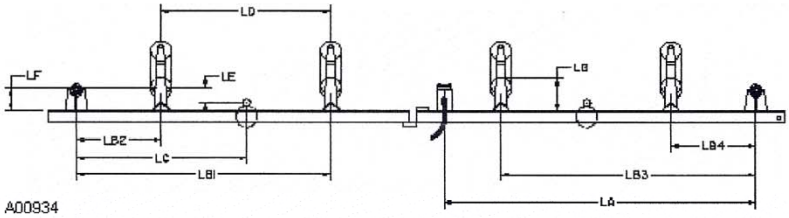

Model 10-17-4

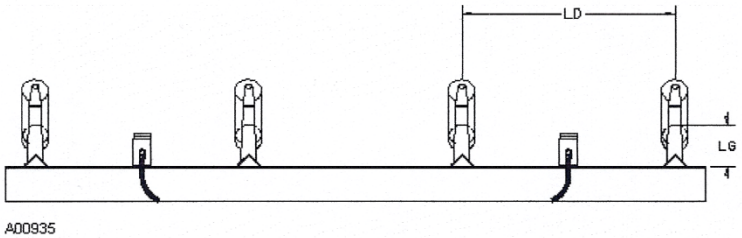

Model 10-14-4

Rules for Entering the Parameters

Table A- 2. Rules for Entering the Parameters

L.C.	**Must be entered**
Idlers	**Must be entered**
LA	**Defaults to one if zero is entered**
LB1	**Defaults to one if zero is entered**
LB2	**Defaults to LB1 if zero is entered**
LB3	**Defaults to LB1 if zero is entered**
LB4	**Defaults to LB1 if zero is entered**
LB5	**Defaults to LB1 if zero is entered**
LB6	**Defaults to LB1 if zero is entered**
LC	**Defaults to one if zero is entered**
LD	**Must be entered**
LE	**Defaults to zero**
LF	**Defaults to zero**
LG	**Defaults to zero**

Tables for Thermo Weighbridges

The tables at the end of this appendix show the default value for scale model selections, no value means that the parameter is not useful for that scale model and it is not displayed.

Underscored dimensions are in metric.

Table A- 3. Thermo Scientific Weighbridges

Table of Thermo Scientific Weighbridges										
#	**Model Belt Width**	**Cal Kit**	**L.C. Idlers**	**LA**	**LB1 LB2 LB3 LB4 LB5 LB6**	**LC**	**LD**	**LE**	**LF LG**	**mV/V**
1	10-20-1 18-36	50-34	1 1	32	24	24	36	0	6.5 6.5	3.0
2	10-20-1 42-72	50-34	1 1	32	22.75	22.75	36	0	6.5 7	3.00
3	10-20-1 24-36	50-34	2 1	32	24	24	36	0	6.5 6.5	3.00
4	10-20-1 42-84	50-34	2 1	32	22.75	22.75	36	0	6.5 7	3.00
5	10-20-2	50-34	1 2	36	18	18	36	0	6.5 7	3.00
6	10-20-2	50-34	1 2	48	24	24	48	0	6.5 7	3.00
7	10-20-1 18-36	50-30	1 1	32	24	38	36	-4.5	6.5 6.5	3.00
8	10-20-1 42-72	50-30	1 1	32	22.75	38	36	-4.5	6.5 7	3.00
9	10-20-1 24-36	50-30	2 1	32	24	38	36	-4.5	6.5 6.5	3.00
10	10-20-1 42-84	50-30	2 1	32	22.75	38	36	-4.5	6.5 7	3.00
11	10-22 18-36	50-30	1 2	62	54 18	38	36	-4.75	6.5 6.5	3.00
12	10-22 18-36	50-30	1 2	71	63 21	42	42	-4.75	6.5 6.5	3.00
13	10-22 18-36	50-30	1 2	80	72 24	48	48	-4.75	6.5 6.5	3.00
14	10-22 42-48	50-30	1 2	62	52.75 16.75	36	38	-4.75	6.5 7	3.00
15	10-22 42-48	50-30	1 2	71	61.75 19.75	42	42	-4.75	6.5 7	3.00
16	10-22 42-48	50-30	1 2	80	70.75 22.75	48	48	-4.75	6.5 7	3.00

Table of Thermo Scientific Weighbridges										
#	**Model Belt Width**	**Cal Kit**	**L.C. Idlers**	**LA**	**LB1 LB2 LB3 LB4 LB5 LB6**	**LC**	**LD**	**LE**	**LF LG**	**mV/V**
17	10-22 18-36	50-30	1 2	62	54 18	68	36	-4.5	6.5 6.5	3.00
18	10-22 18-36	50-30	1 2	71	63 21	77	42	-4.5	6.5 6.5	3.00
19	10-22 18-36	50-30	1 2	80	72 24	86	48	-4.5	6.5 6.5	3.00
20	10-22 42-48	50-30	1 2	62	52.75 16.75	68	36	-4.5	6.5 7	3.00
21	10-22 42-48	50-30	1 2	71	61.75 19.75	77	42	-4.5	6.5 7	3.00
22	10-22 42-48	50-30	1 2	80	70.75 22.75	86	48	-4.5	6.5 7	3.00
23	10-22 18-36	50-34	1 2	62	54 18	54	36	0	6.5 6.5	3.00
24	10-22 18-36	50-34	1 2	71	63 21	63	42	0	6.5 6.5	3.00
25	10-22 18-36	50-34	1 2	80	72 24	72	48	0	6.5 6.5	3.00
26	10.22 42-48	50-34	1 2	62	52.75 16.75	52.75	36	0	6.5 7	3.00
27	10.22 42-48	50-34	1 2	71	61.75 19.75	61.75	42	0	6.5 7	3.00
28	10.22 42-48	50-34	1 2	80	70.75 22.75	84	48	0	6.5 7	3.00
29	10-20-WF	BAR	1 1	32	24	24	30	-2	4 4	3.00
30	10-20-WF	BAR	1 1	32	22.75	22.75	30	2	4 4	3.00
31	10-20-WF	BAR	1 1	32	24	36	30	2	4 4	3.00
32	10-20-WF	BAR	1 1	32	22.75	36	30	2	4 4	3.00
33	10-17-2	50-17	2 2	64	54 18	36	36	-4.75	6.5 7	3.00
34	10-17-2	50-17	2 2	76	63 21	42	42	-4.75	6.5 7	3.00
35	10-17-2	50-17	2 2	88	72 24	48	48	-4.75	6.5 7	3.00
36	10-17-2	50-17	2 2	70 .7 4	57.0639 19.68	37	1000 39.37	-4.75	6.5 7	3.00

Table of Thermo Scientific Weighbridges										
#	**Model Belt Width**	**Cal Kit**	**L.C. Idlers**	**LA**	**LB1 LB2 LB3 LB4 LB5 LB6**	**LC**	**LD**	**LE**	**LF LG**	**mV/V**
37	10-17-2	50-17	2 2	88	70.8647 23.62	24	1200 47.24	-4.75	6.5 7	3.00
38	10-17-4	50-17	2 4	64	54 18	36	36	-4.75	6.5 7	3.00
39	10-17-4	50-17	2 4	76	63 21	42	42	0	6.5 7	3.00
40	10-17-4	50-17	2 4	88	72 24	48	48	0	6.5 7	3.00
41	10-17-4	50-17	2 4	70 .7 4	57.0639 19.08	37	1000 39.37	0	6.5 7	3.00
42	10-17-4	50-17	2 4	88	70.8647 23.62	24	1200 47.24	0	6.5 7	3.00
43	10-14-3	50-14	2 4				36			3.00
44	10-14-3	50-14	4 3				42			3.00
45	10-14-3	50-14	4 3				48			3.00
46										3.00
47	10-14-4	50-14	4 4				36			3.00
48	10-14-4	50-14	4 4				42			3.00
49	10-14-4	50-14	4 4				48			3.00
50	10-14-4	50-14	4 4				54			3.00
51	10-14-4	50-14	4 4				1000 39.37			3.00
52	10-14-4	50-14	4 4				1200 47.24			3.00
53	10-30	50-30	1 1				36			1.80
54	10-11 18-42	WTS	1 1	55 .5	48	40	36	6.5		3.00
55	10-11 48-72	WTS	1 1	56 .5	48	40	36	7 7		3.00
56	10-12	WTS	1 2	66	48	40	36	7 7		3.00

Table of Thermo Scientific Weighbridges										
#	**Model Belt Width**	**Cal Kit**	**L.C. Idlers**	**LA**	**LB1 LB2 LB3 LB4 LB5 LB6**	**LC**	**LD**	**LE**	**LF LG**	**mV/V**
57	10-17-2D	50-17	2 2	40	24 24	24	48	6.5 7		3.00
58	10-17-2D	50-17	2 2	34	21 21	21	42	6.5 7		3.00
59	10-17-2D	50-17	2 2	28	18 18	18	36	6.5 7		3.00
60										
214	10-101R-1	50-30	1 1				1000 39.37			2.00
215	10-101R-2	50-30	2 1				1000 39.37			2.00

Appendix B Linearization

Request REC 3909 from factory.

Appendix C Micro-Tech 2000 Model 2001 Integrator

This appendix contains a detailed listing of all the setup and calibration menus except for MAIN MENU 5, Communication Option menu.

MAIN MENU 5 scrolls are located in the manual supplied with the communication option.

Menu Display

The integrator is a menu driven machine that allows the operator to access all setup, test and calibration parameters. Main Menu screens 1 through 6 can be accessed at anytime by pressing the MENU key until the desired menu screen is displayed. Menu scrolls may be selected by pressing the soft key directly below the desired scroll, and then using the Up/Down scroll key.

If the integrator is password protected, the appropriate password must be entered prior to making changes or performing routine calibration. Menus may be viewed without entering a password, but no entries are allowed unless the password is entered.

Optional scrolls are only available if the available option has been installed. The following screens are activated by the MENU key.

```
        -MAIN MENU 1-
Press MENU for more
ZERO        SPAN        MATL
CAL         CAL         CAL
```

```
        - MAIN MENU 2 -
Press MENU for more
                SCALE       CALIB
DISPLAY         DATA        DATA
```

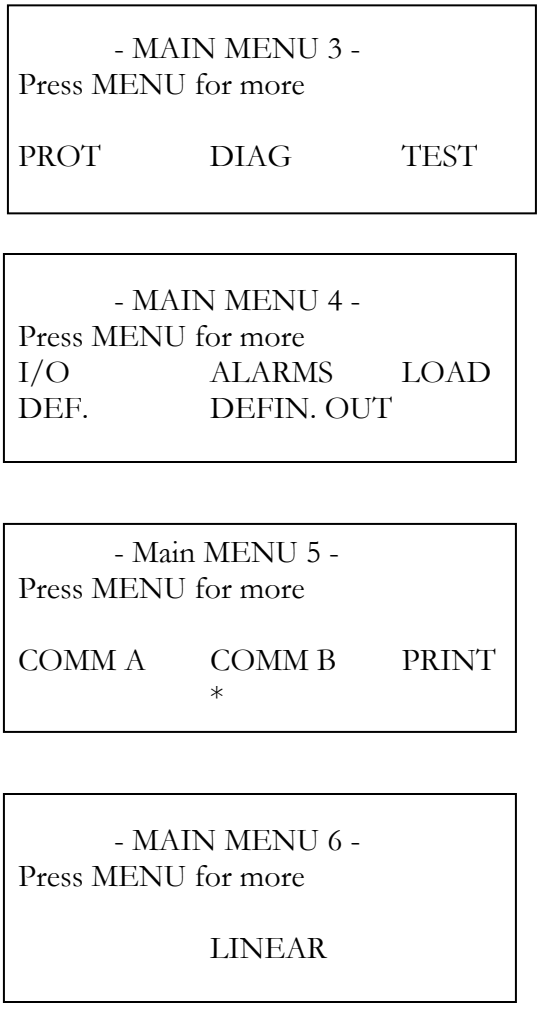

* Can be AB RIO or PRO DP

Calibration

Main Menu 1 contains the Calibration Menu. Menu 1 is selected by pressing the MENU key until Main Menu 1 appears. Desired calibration scrolls are selected by pressing the soft keys directly below the desired scroll.

Zero Calibrate Scroll

The zeroing process is implemented as a machine directed procedure.

1. Auto Zero

```
          - ZERO CAL -
Run belt empty, then
press START.
START          EXIT          MANUAL
```

Pressing the EXIT soft key returns the operator to Main Menu 1. Pressing MANUAL advances to Step 2 below. Pressing RUN at any time returns to the Run Menu.

The belt must be running during Auto Zero, since a complete zeroing procedure requires at least one full revolution of the belt to be averaged.

When START is pressed, the following screen is displayed.

```
AUTO ZEROING
Time remaining          0000
Rate:                 000.0 Tph
Tot                 000000 Tons
```

During Auto Zero, resolution of the total is ten times higher than normal. The number of seconds in Line 2 is calculated based on the current speed, and corresponds to the time remaining for completing the test. If the belt is not running at the moment the test is started or it is stopped during the test, a message is displayed, indicating the procedure has been aborted.

```
WARNING Belt stopped
Calibration aborted.

EXIT
```

EXIT returns to Main Menu 1. When zero is reached, the system automatically displays the following screen.

```
AUTO ZERO COMPLETE
Error ±000.00 %
Change zero?
YES          NO          ADV
```

The word "COMPLETE" is flashing. Pressing ADV changes from Error % to Accumulated Weight. The percentage of error is related to full scale capacity.

Pressing NO returns the screen to Main Menu 1 without changing the zero number.

When YES is pressed, the zero number is changed and the next screen appears.

```
ZERO @ CHANGED
New zero #   00000
Old zero #   00000
RUN          MENU        ADV
```

ADV changes from "Old zero" to "Rate", to "Accumulated Weight", and to "Error %".

Press MENU to repeat Auto Zero calibration. Press RUN to return to the Run Menu.

2. Manual Zero

The Manual Zero procedure shows the zero constant and allows direct entry if known. Use the ENTER key to confirm the new number.

```
    - MANUAL ZERO -
Rate        000.0 Tph
Zero #      00000
ENTER       EXIT        ADV
```

Password:Operator

Default: **40000**

Min: **0**

Max: **120000**

The ADV key is only displayed if Auto Zero Tracking option is enabled. The AZT function accurately tracks the zero of the scale by calculating an additional zero constant. The portion of zero due to AZT is not incorporated in the zero constant, but is shown separately.

When ADV is pressed, the system scrolls between Zero and AZT:

```
    - MANUAL ZERO -
AZT #        ±000000
AZT #        ±000000
ENTER        EXIT        ADV
```

Password: Operator

When the AZT is displayed, the ENTER key incorporates the AZT number into the Zero constant, so the displayed AZT number and percentage changes to zero.

Span Calibration Scroll

Three simulated load calibration options are available: R-Cal, test weights and test chains. Test weights or test chains require additional hardware and handling equipment.

The system allows the operator to select which one of the three methods is to be used for routine calibration. The selection is made in Main Menu 2, CAL DATA Scroll 1.

1. Auto Span

    a. Starting an R-Cal Calibration

    Press the SPAN CAL soft key. The following screen appears.

```
        - AUTO SPAN R Cal -
Run belt empty, then
press START.
START        EXIT        MANUAL
```

Pressing the EXIT soft key or MENU control key returns the screen to Main Menu 1.

Press START to initiate R-Cal span calibration. There is no totalization for three seconds until the weight signal has stabilized. Go to Step D below.

b. Starting a Chain Calibration

Stop the conveyor belt.

Press SPAN CAL soft key. The following screen appears.

- AUTO SPAN Chain -	
Press START to begin	Password: Operator

Pres EXIT to Main Menu 1.

If MANUAL is pressed, the following screen is displayed.

- MANUAL SPAN –			
Rate	xxx.xx TPH		Password: Operator
SPAN #	xxxxxx		
ENTER	EXIT	RUN	

Pressing EXIT returns to the previous screen (AUTO SPAN Chain).

Pressing RUN returns to the main run screen.

Manually change the SPAN number by entering in the desired value and pressing the ENTER soft key.

NOTE. This may result in an un-calibrated scale.

Press START to disengage the Master Tons counter. The following screen appears.

```
        - AUTO SPAN Chain -

Apply chain, then                    Password: Operator
press START.
```

Pressing the EXIT soft key or MENU control key returns the screen to Main Menu 1.

Apply chains on conveyor belt.

When START is pressed, the following screen appears.

```
        - AUTO SPAN Chain -
Run belt, then                       Password: Operator
press START.
START          EXIT
```

Restart conveyor belt and insure chain placement is proper.

Press START.

Go to Step D below.

c. Starting a Test Weights Calibration

Stop the conveyor belt.

Press the SPAN CAL soft key. The following screen appears.

```
        - AUTO SPAN Weights -
Press START to begin                 Password: Operator
weight calibration.
START          EXIT        MANUAL
```

Pressing EXIT returns the screen to Main Menu 1.

If MANUAL is pressed, the following screen is displayed.

- MANUAL SPAN –		
Rate	xxx.xx TPH	
SPAN #	xxxxxx	
ENTER	EXIT	RUN

Password: Operator

Pressing EXIT returns to the previous screen (AUTO SPAN Chain).

Pressing RUN returns to the main run screen.

Manually change the SPAN number by entering in the desired value and pressing the ENTER soft key.

NOTE. This may result in an un-calibrated scale.

Pressing the START soft key will disengage the Master Tons counter. If the "LOAD WGTS" output has been selected in the I/O Definition Scroll, test weights are automatically loaded after START is pressed. Wait for test weights to be loaded prior to proceeding. The message displayed will be "Press START to load test weights".

When START is pressed, the following screen appears.

- AUTO SPAN Weights -	
Run belt, then	
press START.	
START	EXIT

Password: Operator

Pressing EXIT returns the display to Main Menu 1.

When START is pressed, the following screen is displayed.

- AUTO SPAN Chain - Run belt, then press START. START EXIT

Password: Operator

Restart conveyor belt if it is not running and press START.

Go to Step D below.

d. Executing the Span Calibration

Whichever method has been used to start automatic span calibration, after START is pressed, the following screen is displayed.

NOTE: Entry point when REPEAT is pressed (see below).

AUTO SPANNING Time remaining 0000 Rate 000.0 Tph Tot 000000 Tons

During Auto Span, the resolution of the total is ten times higher than normal. The time remaining shown in Line 2 is calculated upon the current speed, and it is based on the test duration. If the belt is stopped during the test, a message is displayed indicating the procedure has been suspended. No action is required from the operator at this stage, just wait until the test is completed.

e. Material Factor

This part of the procedure is only executed if a material calibration is done before, and the current simulated load method has no material factor installed.

NOTE: If a calibration with material has not been run before, or a manual span entry is done, or this is not the first time the current simulated load method is used, this section does not apply. Go to Step f below.

It is very important to understand that when this procedure is executed, the system does not alter the span. The span is assumed to be correct because it was obtained from a test with material. The system acquires the Material Factor for the current calibration method instead. This means the integrator knows in the future how to use this method for correctly changing the system's span.

```
AUTO SPAN COMPLETE
ERROR          +/-00.00 %
Unfactored Calcon
EXIT          FACTOR       REPEAT
```

The word "COMPLETE" is flashing. If EXIT is pressed, the system acknowledges the Material Factor is not used. The effect of this is the system does not ask for a material factor any more for this calibration method until a manual span entry is done. By pressing EXIT the operator tells the system that material factors is not desired, but wants to use the test results for changing the span number. After EXIT is pressed, go to Step F below. If REPEAT is pressed go to Step D above.

If FACTOR is pressed, the following screen is displayed.

```
R-CAL Matl FACTOR
New factor:    000.00 %
Change factor?
YES              NO             ADV
```

Can be R-CAL or WTS or CHAINS

ADV advances to Old factor and again to New factor. If NO is pressed, the Material Factor is set to 1.00 (see above), then go to Step F below.

If YES is pressed, the following screen is displayed.

```
R-CAL Matl FACTOR
Old factor:    00.00 %
New factor:    00.00 %
RUN          MENU          REPEAT
```

Can be R-CAL or WTS or CHAINS

The REPEAT key returns the operator to Step D above. RUN and MENU can be used for ending the procedure. After this point is reached, the system does not proceed to the next section.

f. Recording New Span

The system calculates the new span based on the result of the test performed with the simulated method.

```
AUTO SPAN COMPLETE
Error  +/-00.00 %
Change span?
YES              NO              ADV
```

The word "COMPLETE" is flashing. Pressing ADV advances to Accumulated Weight, Cal Con, Material Factor and back to Error%. If the Material Factor is INVALID (never acquired before), it is not displayed.

If YES is pressed, the following screen is displayed.

```
SPAN # CHANGED
Old span #    000000
New span #    000000
RUN           REPEAT        ADV
```

ADV changes from Error% to Accumulated Weight, Calcon, Old Span, Material Factor (only if not INVALID). REPEAT moves back to Step D above and calibration restarts.

If NO is pressed, the following screen is displayed.

```
SPAN UNCHANGED
Old span #    000000
New span #    000000
RUN           REPEAT      ADV
```

ADV changes from Error % to Accumulated Weight, Calcon, Old Span, and Material Factor.

REPEAT moves back to Step D above and calibration restarts. Please note the Old span and New span are shown equally. This is because no change to the span has been done.

g. Ending an Auto Span Procedure with Chains or Test Weights

In case of auto-span with chains or weights, after RUN is pressed, the following screen is displayed.

```
Remove chains (or weights)
before returning to
normal operation!!
RUN              MENU
```

Pressing RUN resumes totalization and moves to the RUN Scroll.

h. Ending an Auto Span Procedure with R-Cal

In case of auto-span with R-Cal, after RUN is pressed, the R-Cal relay is deenergized and the display is locked for three seconds.

2. Manual Span

If the span constant is known, the manual span procedure allows the operator to make a direct a change of span.

```
    - MANUAL SPAN -
Rate          000.0 Tph
Span #        0000000
ENTER         EXIT        RUN
```

Password: Operator

Default: **300000**

Min: **222223**

Max: **20000002**

The EXIT key returns the operator to Main Menu 1.

It is very important to note that entering the Manual Span sets the material factors to INVALID (if any). This means that the automatic span tests need to be run again after a manual span entry has been performed, in order to acquire the material factors again.

Material Span Calibration

Material calibration is a machine directed procedure for calibrating the belt scale using actual material.

Pre weighed or post weighed material, having been weighed to a known accuracy on a static scale, passes across the belt scale. This procedure automatically adjusts the integrator span and factors all simulated test Cal Cons if the operator prefers they be factored.

1. Material Calibration Procedure

    a. Starting the Test

    Press MAT'L CAL soft key and DOWN ARROW. The following screen appears.

```
MAT'L CALIBRATION
Run belt empty, then
press START.
START          MENU
```

The operator must run the belt for at least one minute or one belt revolution before proceeding. After START is pressed, the master weight totalizer is disengaged.

When START is pressed, the following screen appears.

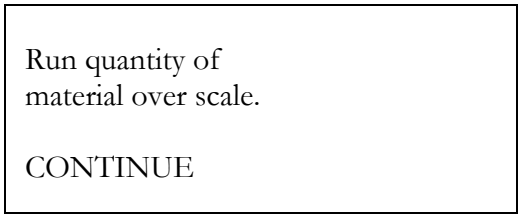

Press CONTINUE to go to the next scroll and follow the test procedure.

b. Running the Test with Material

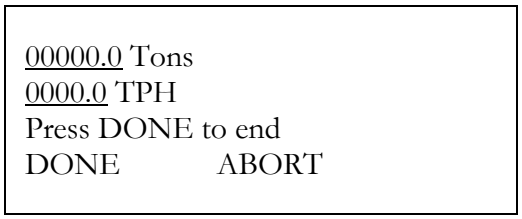

During the material calibrate procedure, the resolution of total tons counted is ten times higher than normal.

Wait until all material has passed over the scale, then press DONE. Pressing ABORT forces the program back to the top of the menu.

c. Entering the Reference Weight

At the end of the test, the system asks the operator whether the (actual) weight of the material is already known.

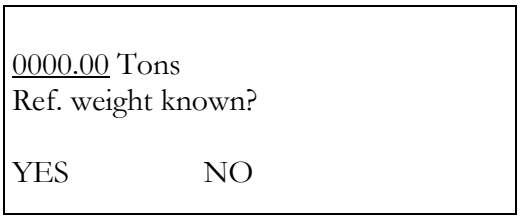

When NO is selected, the system is notified that the reference (actual) weight of the material is not known. If NO is selected, the system moves to the run display where MAT'L is flashing to remind the operator that the material test is incomplete.
Press MAT'L when the actual material weight is known and enter in the following screen.

If YES was answered before, or if the MAT'L key had been pressed after NO, the following screen appears.

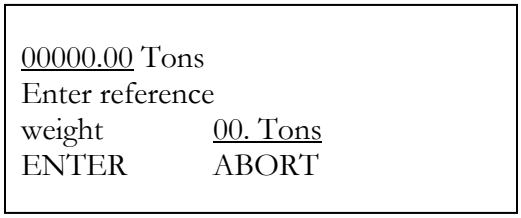

The operator has to enter the actual material weight in the same units as the integrator is setup for. Example: Convert pounds to the nearest hundredth (0.01) of a ton and enter if the integrator is set up for tenths (0.1) of a ton increments. Material calibration is running at ten times normal.

After the material weight is entered, press ENTER to confirm.

If ABORT is pressed, the information acquired during the test is lost and the system returns to Main Menu 1 screen.

d. Updating the Span Constant

After the amount of material has been entered, the following screen is displayed.

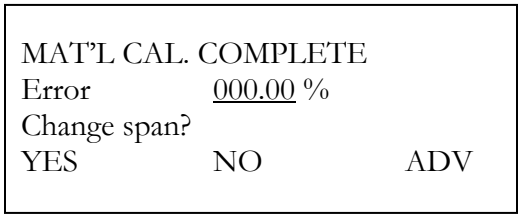

The word "COMPLETE" is flashing. Pressing ADV changes from Error% to Actual Difference of Total. Pressing NO moves to "Add reference weight to total".

e. Acquiring the Material Factors

If YES was pressed, the following screen is displayed confirming the new span constant was installed. At this point, the scale is calibrated to the actual material test.

SPAN # CHANGED		
New span #	000000	
Old span #	000000	
RUN	MENU	FACTOR

If FACTOR is pressed, the following screen is displayed.

MAT'L CALIBRATION		
Automatic correction		
to Material Factors		
R-CAL	WTS	CHAIN

Of the three calibration methods, only the ones that have been already used are shown. It is not possible to calculate a material factor if a simulated test was not run before the material test. If none of the three was done, the FACTOR soft key in the previous scroll is not displayed.

If R-CAL or WTS or CHAIN is pressed:

R-CAL Matl FACTOR		
New factor 000.00 %		
Change factor?		
YES	NO	ADV

Can be R-CAL or WTS or CHAINS

Pressing ADV advances to the Old factor and again to the New factor. YES goes to the next scroll. NO goes back to Step E above. Press YES if this specific simulated method of calibration has already been used and the related material factor will be recorded. By doing this, the system is able to execute accurate calibrations in the future with this simulated method. Press NO if the acquired material factor is not desired. If YES is pressed, the following screen is displayed.

R-CAL Matl FACTOR		
Old factor:	00.00 %	
New factor:	00.00 %	
RUN	MENU	FACTOR

Can be R-CAL or WTS or CHAINS

The FACTOR key repeats for all simulated test previously run. If RUN or MENU is pressed, the following screen is displayed.

f. Adding the Reference Weight to Total

MAT'L CALIBRATION	
Add reference	
weight to totals	
YES	NO

If YES is pressed, the amount of material used for the test is added to the master, reset and operator's totals. If the answer NO is selected, the information is lost.

NOTE: Moisture compensation is inhibited during material calibration. This is done to make the check of the totalized quantity easier. The static scale provides the weight of the material including moisture. The weight of the water is removed immediately before adding to total at the end of the procedure, so that the Master, Reset and Operator's totals are still correct.

Main Menu 2

Main Menu 2 contains the setup and configuration menus. Main Menu 2 is selected by pressing the MENU key until Main Menu 2 appears. Setup scrolls are selected by pressing the key directly below the desired scroll.

- MAIN MENU 2 -		
Press MENU for more		
	SCALE	CALIB
DISPLAY	DATA	DATA

Display

1. Measure Units

- DISPLAY SCROLL 1 -	
Measure units	Password: Service
> ENGLISH <	
CHOICE ENTER	

Default: **ENGLISH**

Selections: **ENGLISH, METRIC, MIXED**

NOTE. If the Measure Units are changed from English to Metric (or vice versa) after the scale is calibrated, the span number will change, but the calibration will remain the same.

The units to be used for totalization are selected here. Press ENTER soft key to accept the default unit, or CHOICES soft key to scroll selections. Press ENTER to confirm your selection. Scroll down.

- DISPLAY SCROLL 2 -	
Totalization Units	Password: Service
> Tons <	
CHOICE ENTER	

if ENGLISH: **Default:** **Tons**
Selections: **Tons, LTons, Pounds**

if METRIC: **Default** **tonnes**
Selections: **tonnes, kg**

if MIXED: **Default:** **Tons**
Selections: **Tons, LTons, Pounds, tonnes, kg**

Units used for parameters expressed in length are selected here. Selections are only available if MIXED units are in use. Press ENTER soft key to accept the default unit, or CHOICES soft key to scroll selections. Press ENTER to confirm your selection. Scroll down.

- DISPLAY SCROLL 3 -	
Length Units	Password: Service
> feet <	
CHOICE ENTER	

if ENGLISH: Default: Feet

if METRIC: Default Meters

if MIXED: Default: Feet
Selections: Feet, meters

The rate is displayed according to the units selected here. Press ENTER soft key to accept the default unit, or CHOICES soft key to scroll selections. Press ENTER to confirm your selection. Scroll down.

- DISPLAY SCROLL 4 -	
Rate Units	Password: Service
> TPH <	
CHOICE ENTER	

if ENGLISH: Default: Tph
Selections: Tph, LTph, Lb./h, Percent %, LB/m, T/m, LT/m

if METRIC: Default: kg/h
Selections: t/h, kg/h, kg/m, t/m, Percent %

if MIXED: Default: Tph
Selections: Tph, LTph, Lb/h, Percent %, t/h, kg/h, kg/m, t/m, b/m, T/m, LT/m

The units used for entering the load cell capacity are specified here. In this particular case, the use of English or Metric units is always allowed. Press ENTER soft key to accept the default unit, or CHOICES soft key to scroll selections. Press ENTER to confirm your selection. Scroll down.

- DISPLAY SCROLL 5 - Load cell Units > Pounds < CHOICE ENTER	Password: Service

if ENGLISH: or MIXED	**Default:**	**Pounds**
if METRIC:	**Default:**	**kilograms**
	Selections:	**Lbs, kg**

2. Defining the Language

   The Micro-Tech 2000 is a dual language instrument. English is always the first language, the second can be one from the following list. Press the DOWN scroll key.

- DISPLAY SCROLL 6 - Language > USA < CHOICE ENTER	Password: Service

Default: **USA**

Selections: **USA, ESP (Spanish)**

3. Setting Time and Date Mode

   This section applies only if the COMM board is installed. The user has to define the format for displaying and printing time and date.

- DISPLAY SCROLL 7 -
Time > 24 h <

if US or ENGLISH:	**Default:**	**am/pm**
If other language:	**Default:**	**24 h**
	Selections:	**am/pm, 24 h**

- DISPLAY SCROLL 8 -
Date > MM-DD0YYYY <

if US or ENGLISH:	**Default:**	**MM-DD-YYYY**
If other language:	**Default:**	**DD-MM-YYYY**
	Selections:	**DD-MM-YYYY, MM-DD-YYYY, YYYY-MM-DD**

4. Setting Line 3 of the Run Menu

   The Run Menu can be configured to display on line 3 either Belt Loading, Speed, Date and Time (if COMM is installed) or No Display (the default selection).

- DISPLAY SCROLL 9 -
Run display line 3 > No Display < CHOICE ENTER

Password: Operator

Default: **NO DISPLAY**

Selections: **NO DISPLAY, LOAD, SPEED, DATE/TIME (Only if COMM board is installed)**

5. Setting Damping Factors for the Display

   The process variables when displayed on the screen can be damped by a programmable factor, to filter out variations that can be introduced by mechanical vibrations. To tune a damping filter, enter the number of seconds corresponding to the desired time constant. If for example 10 seconds is entered, the process variable reaches the stability after a step change in 10 seconds. This damping factor only affects the display, not the current output variable, which has a separate damping factor, selectable in Main Menu 4, I/O Define.

- DISPLAY SCROLL 10 - Damping Display RATE Damping = 0 sec ENTER	Password: Operator

Default: **2 sec**

Min: **0 sec**

Max: **400 sec**

The following screen is only displayed if RUN display line 3 is set to load.

- DISPLAY SCROLL 11 - Damping Display LOAD Damping = 2 sec ENTER	Password: Operator

Default: **2 sec**

Min: **0 sec**

Max: **400 sec**

The following screen is only displayed if the Run display Line 3 is set to Speed:

```
        - DISPLAY SCROLL 12 -
Damping Displ SPEED
Damping = 2 sec
ENTER
```

Default: **2 sec**

Min: **0 sec**

Max: **400 sec**

Scale Data

Refer to Determining Installation Parameters and Appendix A, Thermo Weighbridge Physical Parameters.

1. Scale Capacity and Divisions

   The first entry is the scale capacity, which is the maximum rate at which the scale is allowed to work. This entry also defines the default number of decimal places that are used for displaying rate. Use numeric keys for entering the number, confirm with ENTER. Scroll down.

- SC DATa SCROLL 1 - Max. scale capacity 500.0 Tph ENTER	Password: Service

Default: **500.0**

Min: **1**

Max: **200000**

When the Scale capacity is entered, the number of decimal places is also defined. If, for example, the User enters 500.0, this sets the "Scale Divisions" parameter to 0.1. Advancing to the next scroll, the User then sees first the Scale Division corresponding to the just entered Scale Capacity (in the example 0.1). If required, the User is able to alter the Scale Division to any of the available options.

Press the ENTER soft key to accept the default divisions, or the CHOICES soft key to scroll selections. Press ENTER to confirm your selection. Scroll down.

- SC DATA SCROLL 2 - Scale division > 0.1 < CHOICE ENTER	Password: Service

Default: **0.1**

Selections: **0.1, 0.2, 0.5, 1, 2, 5, 10, 20, 50, 0.01, 0.02, 0.05, 0.001, 0.002, 0.005**

2. Selecting the Weighbridge Model

By entering the code number of your Thermo Fisher scale on the next screen, the Integrator automatically calculates parameters of the system such as number of load cells and number of weigh idlers. This entry is also used for internal calibration calculations. The default model number for the Model 2001 Integrator is 1, which corresponds to the belt scale model 10-20-1.

- SC DATA SCROLL 3 - Belt scale code # > 1 < ENTER DETAIL	Password: Service

Default: **1**

Min: **0**

Max: **500**

Press ENTER to accept the displayed selection from the database listed in Appendix A/1, Thermo Fisher Weighbridge Physical Parameters. If ENTER is used, the scrolls from 3A to 3J are not displayed. Skip to Step 4, Defining Dimensional Parameters of the Application.

Press DETAIL if you want to force the following scrolls 3A to 3O to be displayed even if ENTER was used.

Enter 0 if you want to define the weighbridge not using the database. This should only be done for special weighbridges not being part of the standard set of Thermo Fisher scales. Entering 0 forces the following scrolls 3A to 3O to be displayed.

3. Detailing the Mechanical Parameters of the Frame

The following screens are only displayed if OTHER or DETAIL were pressed. Figure 1-1 in Appendix A, Thermo Fisher Weighbridge Physical Parameters, can be used to identify the following parameters.

Parameter LA: pivot to Load cell distance: The distance from pivot to load cell should be measured to within 0.032 (1/32) inch (1 mm).

Using the numeric keys, enter the distance recorded in Section 2.5.1 and press ENTER. For weighbridges which do not have a pivot, enter zero.

- SC DATA SCROLL 3A -	Password: Service
Pivot to load cell distance: 000.00 In ENTER	

If ENGLISH or MIXED:		**If METRIC:**	
Default:	**32 in**	**Default:**	**1000 mm**
Min:	**0.00 in**	**Min:**	**0 mm**
Max:	**150.00 in**	**Max:**	**3800 mm**

This is the number of weigh idlers affixed to the scale weighbridge.

- SC DATA SCROLL 3B -	Password: Service
# of weigh idlers 1 ENTER	

Default: **1**

Min: **1**

Max: **6**

Parameter LB1: Pivot to first weigh idler distance. Measure the distance between the pivot center line and first weigh idler grease fitting. Enter the distance (within 0.032 inch or 1 mm) recorded in "Determining Installation Procedures".

For weighbridges which do not have a pivot, enter zero.

- SC DATA SCROLL 3C -	Password: Service
Pivot to 1st idler distance 000.00 In ENTER	

If ENGLISH or MIXED:		**If METRIC:**	
Default:	**24 in**	**Default:**	**800 mm**
Min:	**0.00 in**	**Min:**	**0 mm**
Max:	**100.00 in**	**Max:**	**2500mm**

If the number of weigh idlers entered in scroll 3B is more than one, the following screens are displayed. Measure the distance between the pivot center line and first weigh idler grease fitting. Enter the distance (within 0.032 inch or 1 mm) recorded in "Determining Installation Procedures". For weighbridges which do not have a pivot, enter zero.

Only if # of weigh idlers >=2:

- SC DATA SCROLL 3D -	Password: Service
Pivot to 2nd idler distance 000.00 In ENTER	

If ENGLISH or MIXED:		**If METRIC:**	
Default:	**0.00 in**	**Default:**	**0 mm**
Min:	**0.00 in**	**Min:**	**0 mm**
Max:	**100.00 in**	**Max:**	**2500mm**

Only if # of weigh idlers >=3:

- SC DATA SCROLL 3E - Pivot to 3rd idler distance 000.00 In ENTER	Password: Service

If ENGLISH or MIXED:		**If METRIC:**	
Default:	**0.00 in**	**Default:**	**0 mm**
Min:	**0.00 in**	**Min:**	**0 mm**
Max:	**100.00 in**	**Max:**	**2500mm**

Only if # of weigh idlers >=4:

- SC DATA SCROLL 3F - Pivot to 4th idler distance 000.00 In ENTER	Password: Service

If ENGLISH or MIXED:		**If METRIC:**	
Default:	**0.00 in**	**Default:**	**0 mm**
Min:	**0.00 in**	**Min:**	**0 mm**
Max:	**100.00 in**	**Max:**	**2500 mm**

Only if # of weigh idlers >=5:

- SC DATA SCROLL 3G - Pivot to 5th idler distance 000.00 In ENTER	Password: Service

If ENGLISH or MIXED:		If METRIC:	
Default:	**0.00 in**	**Default:**	**0 mm**
Min:	**0.00 in**	**Min:**	**0 mm**
Max:	**100.00 in**	**Max:**	**2500mm**

Only if # of weigh idlers =6:

- SC DATA SCROLL 3H -	Password: Service
Pivot to 6th idler distance 000.00 In ENTER	

If ENGLISH or MIXED:		If METRIC:	
Default:	**0.00 in**	**Default:**	**0 mm**
Min:	**0.00 in**	**Min:**	**0 mm**
Max:	**100.00 in**	**Max:**	**2500mm**

NOTE: All measurements must be (within 0.032 inch or 1 mm) recorded in "Determining Installation Procedures". Enter the distance with the numeric keys and press ENTER.

Parameter LE: Pivot to test-weight height. For weighbridges which do not have a pivot, enter zero. 3I, L, M and N only apply if test weights are provided for calibration.

- SC DATA SCROLL 3I -	Password: Service
Pivot to test-weight height 000.00 In ENTER +/-	

If ENGLISH or MIXED:		**If METRIC:**	
Default:	**0.00 in**	**Default:**	**0.0 mm**
Min:	**-20 in**	**Min:**	**-500.0mm**
Max:	**+20.00 in**	**Max:**	**+ 500.0mm**

Parameter LC: Pivot to test-weight length. For weighbridges which do not have a pivot, enter zero.

- SC DATA SCROLL 3L - Pivot to test-weight length 000.00 In ENTER	Password: Service

If ENGLISH or MIXED:		**If METRIC:**	
Default:	**24.00 in**	**Default:**	**0 mm**
Min:	**0.00 in**	**Min:**	**0 mm**
Max:	**200.00 in**	**Max:**	**5000mm**

Parameter LF: Pivot to carriage height. For weighbridges which do not have a pivot, enter zero.

- SC DATA SCROLL 3M - Pivot to carriage height 000.00 In ENTER	Password: Service

If ENGLISH or MIXED:		**If METRIC:**	
Default:	**6.50 in**	**Default:**	**0 mm**
Min:	**0.00 in**	**Min:**	**0 mm**
Max:	**10.00 in**	**Max:**	**250 mm**

Parameter LG: Carry roll to carriage height. For weighbridges which do not have a pivot, enter zero.

- SC DATA SCROLL 3N - Roll to carriage height 000.00 In ENTER	Password: Service

If ENGLISH or MIXED:		**If METRIC:**	
Default:	**6.50 in**	**Default:**	**0 mm**
Min:	**0.00 in**	**Min:**	**0 mm**
Max:	**20.00 in**	**Max:**	**250 mm**

Enter the number of load cells of your weighbridge.

- SC DATA SCROLL 3O - # of load cells 0 ENTER	Password: Service

Default:	**1**
Min:	**1**
Max:	**6**

4. Defining Dimensional Parameters of the Application

   Parameter LD: Idler spacing in scale area. For better accuracy, average the distance between the idlers across the scale on both sides. Measure to within 0.032 inch or 1 mm with the numeric keys and press ENTER.

- SC DATA SCROLL 4 - Idler spacing 36.00 In ENTER	Password: Service

If ENGLISH or MIXED:		**If METRIC:**	
Default:	**36.00 in**	**Default:**	**1000 mm**
Min:	**2.00 in**	**Min:**	**50 mm**
Max:	**120.00 in**	**Max:**	**2500mm**

   Enter the angle of inclination of the belt conveyor. If an inclination meter is connected to the scale, after this preliminary set up has been completed, enable the automatic angle detection in I/O definition (Menu 4) and calibrate the angle meter.

- SC DATa SCROLL 5 - Conveyor's angle 0.0 Degrees ENTER +/-	Password: Service

Default:	**0.00**
Min:	**-25.00º**
Max:	**+25.00º**

5. Defining the Load Cell(s)

   Enter the load cell capacity as it appears on the label placed on the load cell.

- SC DATA SCROLL 6 - Load cell capacity 250 Lbs ENTER	Password: Service

If ENGLISH or MIXED:		If METRIC:	
Default:	**250.0 Lbs**	**Default:**	**100 kg**
Min:	**1 Lbs**	**Min:**	**1 kg**
Max:	**15000 Lbs**	**Max:**	**5000 kg**

The sensitivity was entered when the belt scale code was entered. If other (0) was selected, enter the load cell sensitivity in mV/V as marked on the label of the load cell. Thermo Fisher load cells are normally 2.000 or 3.000 mV/V.

- SC DATA SCROLL 7 - Load cell sens. 3.00 mV/V ENTER	Password: Service

Default:	**3.00 mV/V**
Min:	**0.500 mV/V**
Max:	**3.500 mV/V**

Load cell resistance is entered on this screen. The resistance for the load cell has been recorded on the System Data Sheet in the front of your belt scale manual. (It is also stamped on the load cell cable.) Enter the ohms for the load cell. The number of scrolls depends on the number of load cells specified in scroll 3.

- SC DATA SCROLL 8A - Load cell #1 res 350.00 Ohms ENTER	Password: Service

Default: **350 Ohms**

Min: **10 Ohms**

Max: **2000 Ohms**

If # of Load Cells is 2 or more:

- SC DATA SCROLL 8B - Load cell #2 res 350.00 Ohms ENTER	Password: Service

Same default and limits of load cell #1.

If # of Load Cells is 3 or more:

- SC DATA SCROLL 8C - Load cell #3 res 350.00 Ohms ENTER	Password: Service

Same default and limits of load cell #1.

If # of Load Cells is 4 or more:

- SC DATA SCROLL 8D - Load cell #4 res 350.00 Ohms ENTER	Password: Service

Same default and limits of load cell #1.

If # of Load Cells is 5 or more:

- SC DATA SCROLL 8E - Load cell #5 res 350.00 Ohms ENTER	Password: Service

Same default and limits of load cell #1.

If # of Load Cells is 6:

- SC DATA SCROLL 8F - Load cell #6 res 350.000 Ohms ENTER	Password: Service

Same default and limits of load cell #1.

6. Defining the Speed Input

   The speed input screen allows the operator to select either the single speed sensor input (default value), or the double speed sensor input (to provide extra safety against speed sensor failure) or a simulated value using an internal timer.

   Simulation allows operation without a speed sensor. When simulated speed is selected, a conveyor running input is required (refer to the field wiring diagram).

NOTE: If speed is selected as the third line display, the line will be blank in RUN mode when simulated speed is selected.

```
        - SC DATA SCROLL 9 -
Speed input
> single <
CHOICE        ENTER
```

Default: **SINGLE**

Selections: **SINGLE, DUAL, SIMULATED**

7. Setting the Dead Band

   The dead band is a percentage of the scale capacity (rate) in which the rate is ignored (if any) and a zero rate is forced. Also totalization is frozen when rate is below dead band.

```
     - SC DATA SCROLL 10 -
Zero Dead-Band Range
 0  %
ENTER
```

Password: Service

Default: **0%**

Min: **0%**

Max: **5%**

Calibration Data

The CAL DATA scroll allows the operator to enter or set parameters which relate to the calibration of the scale.

1. Defining the Calibration Mode

Select which simulated method of automatic calibration is to be used. The selected method is the only one displayed in the calibration section of Menu 1.

- CAL DATA SCROLL 1 - Calibration mode: > R-CAL < CHOICE ENTER	Password: Service

Default: **R-CAL**

Selections: **R-CAL, CHAIN, WEIGHTS**

a. Detailing the R-CAL Parameters

This section only applies if R-CAL mode was selected as the preferred method. Enter the resistance in ohms of the R-cal resistor installed in your integrator. Default value installed is 165000 ohms. See the Data Sheet in front of this manual for exact resistance.

- CAL DATA SCROLL 2 - R-CAL select. Res 165000 ohms ENTER	Password: Service

Default: **165000 Ohms**

Min: **10 Ohms**

Max: **1000000 Ohms**

The system calculates the CALCON (Calibration Constant) based on the mechanical and electrical parameters entered in Scale Data. This menu is for reference only.

- CAL DATA SCROLL 3 - R-CAL constant 00.00 MENU RUN

b. Detailing the Chains Parameters

This section only applies if CHAINS mode was selected as the preferred method. Enter the weight per foot or meter of the chains that is used for calibration.

- CAL DATA SCROLL 4 - Chain select weight 00.000 Lb/Ft ENTER	Password: Service

if ENGLISH or MIXED

Default: 0.000 Lbs/Ft

Min: 0.000 Lbs.Ft

Max: 1000.00 Lbs/Ft

if METRIC:

Default 0.000 kg/m

Min: 0.000 kg/m

Max: 3000.000 kg/m

The system calculates the CALCON (Calibration Constant) based on the mechanical and electrical parameters entered in Scale Data. This menu is for reference only.

- SC DATA SCROLL 5 - CHAIN CAL constant 00.00 MENU RUN	Password: Service

c. Detailing the Test Weight Parameters

This section only applies if TEST WEIGHTS mode was selected as the preferred method. Enter the weight of the test weights that are used for the calibration.

- SC DATA SCROLL 6 - Total test weight on scale 20.000 Lbs. ENTER	Password: Service

if ENGLISH or MIXED

Default: 0.000 Lbs

Min: 0.000 Lbs

Max: Load cell size x no. of load cells

if METRIC:

Default 0.000 kg

Min: 0.000 kg

Max: Load cell size x no. of load cells

The system calculates the CALCON (Calibration Constant) based on the mechanical and electrical parameters entered in Scale Data. This menu is for reference only.

- CAL DATA SCROLL 7 -
WEIGHT CAL constant
00.00
MENU RUN

2. Entering a Calibration Interval (Only if COMM "A" option is installed)

If an optional COMM board is installed, the system can be programmed to prompt the operator when the next calibration is due. If this option is not desired, confirm the

default 0 days interval, otherwise enter the number of days. The calibration date displayed in Scroll 9 is automatically updated whenever a calibration is performed. If a non zero value is entered, an alarm appears after the time is elapsed. The alarm can only be cleared after a calibration check is executed.

- CAL DATA SCROLL 8 - Calibration interval 365 Days ENTER	Password: Operator

Default: **0 Days**

Min: **0 Days**

Max: **365 Days**

This scroll displays the date of the last calibration and the expected date of the next one, based on the entry in the previous screen.

- CAL DATA SCROLL 9 -
Calibration date
Last: MM-DD-YYYY
Next: MM-DD-YYYY

3. Entering Material Factors

The material factor is a number in percent which is used to correct the CALCON to the real value. Entering 0 makes the material factor INVALID.

- CAL DATA SCROLL 10 -			
Material FACTOR			Password: Service
00.00 %	R-Cal		
ENTER	+/-	NEXT	

Default: **0%**

Min: **-99.99%**

Max: **+99.99%**

The NEXT key scrolls between the R-Cal, Weights and Chains material factors. If they have not yet been measured, "INVALID" is displayed.

4. Defining the Calibration Test Duration

   Zero and Span calibrations are more accurate if executed on an entire belt revolution or multiple of it. Press either ACQUIRE or MANUAL, ACQUIRE is the recommended selection. For MANUAL, see Step 7 below.

- CAL DATA SCROLL 11 -	
Establish test duration	
ACQ	MANUAL

Select ACQuire. Acquire is the recommended selection.

a. Acquiring the Test Duration

When selecting FULL, use a 100 foot tape to measure the belt length to the nearest 0.1 foot. Reference a fixed point (an idler) on the conveyor when counting belt revolutions. See "Determining Installation Parameters" for the recorded conveyor belt length.

The PARTIAL (belt length measurement) selection enables the operator to acquire test duration without the entire belt length measurement.

NOTE: This option should only be used when belt length exceeds 1000 feet.

ACQUIRE TEST DUR Choose belt length measurement method. FULL PARTIAL

FULL is the recommended selection.

5. Full Test Duration Acquisition

   If FULL is pressed, the operator is asked to enter the length of one belt revolution. Enter the length recorded in "Determining Installation Parameters". Measure belt length to the nearest 0.1 feet.

Enter length of one belt revolution,\ Length 1000.0 Ft ENTER ABORT

Password: Service

If ENGLISH or MIXED:		**If METRIC:**	
Default:	**1000.0 Ft**	**Default:**	**200.0 m**
Min:	**1.0 Ft**	**Min:**	**0.5 m**
Max:	**10000.0 Ft**	**Max:**	**3000 m**

After the length of the belt has been entered, the system automatically moves to the following screen which prompts the operator to press START when the mark passes the reference point. Pressing ABORT returns the screen to Cal Data Scroll 11.

NOTE: The belt must be running at the maximum speed before executing this function. If not, the prescaler will be improperly calculated.

Start belt. Press START when 1st mark passes reference. START ABORT

NOTE: If a clip detector is installed and clip detector mode is set to "AUTO" in I/O Definition Scroll, skip to Step 6.

When START is pressed, the system automatically moves to the next instructional screen. The operator presses COUNT each time the mark passes the reference point until minimum test load conditions are met (refer to the belt scale installation manual for minimum test level requirements). When the last revolution passes the mark, the operator must press COUNT followed by pressing DONE.

Pressing ABORT returns the screen to Cal Data Scroll 11.

Press COUNT each time a mark passes. 00000 secs 000 revs COUNT ABORT DONE

Pressing ABORT returns the screen to Cal Data Scroll 11.

When test duration is finished, the new values for length of belt and time are displayed. Press CONTINUE.

TEST DURATION Length = 0000.0 Ft Time = 000 sec CONTINUE

6. Auto Count Belt Revolutions

If a clip detector is installed and clip detector mode in I/O Definition is set to "AUTO", the system automatically counts belt revolutions without the need for pressing the COUNT key. The two screens for Acquiring Test Duration are displayed as follows:

```
Start belt. Wait
until 1st mark
passes reference.
                    ABORT
```

When the mark passes, the system automatically moves to the next instructional screen. The system counts each time a mark passes the reference point until the operator presses the DONE key.

```
Press DONE when
ready.
0000 secs        000 revs
ABORT            DONE
```

7. Partial Test Duration Acquisition

CAUTION. THIS OPTION SHOULD ONLY BE USED WHEN BELT LENGTH EXCEEDS 1000 FEET.

If PARTIAL is pressed, the operator is asked to enter the length between two marks on the belt.

Use a 100 foot tape measure to measure the largest possible amount of the belt to the nearest .01 ft. Locate and mark a reference point on the conveyor (or idler).

Pressing ABORT returns the screen to Cal Data Scroll 11.

Enter length between two marks on belt. Length: 200.0 Ft ENTER ABORT	Password: Service

If ENGLISH or MIXED:		**If METRIC:**	
Default:	**200.0 Ft**	**Default:**	**50.0 m**
Min:	**1.0 Ft**	**Min:**	**0.5 m**
Max:	**10000.0 Ft**	**Max:**	**3000.0 m**

After the length of the belt has been entered, the system automatically moves to the following screen which prompts the operator to press START when the mark passes the reference point.

NOTE: The belt must be running at the maximum speed before executing this function. If not, the prescaler is improperly calculated.

Pressing ABORT returns the screen to Cal Data Scroll 11.

Start belt. Press START when 1st mark passes reference. START ABORT

When START is pressed, the system automatically moves to the next instructional screen. The operator presses COUNT each time a mark passes the reference point until both marks have passed. Then press DONE.

Pressing ABORT returns the screen to Cal Data Scroll 11.

Press COUNT each time a mark passes. 00000 secs 000 revs COUNT ABORT DONE

NOTE: The COUNT key is not displayed if the clip detector option is in Auto mode.

When test duration is finished, the new values for length of belt and time are displayed. Press CONTINUE.

TEST DURATION Length = 0000.0 Ft Time = 000 sec CONTINUE

8. Manual Entry of Test Duration

Prior to performing a Manual Test Duration, it is necessary to measure and time the conveyor belt. Using 100 ft tape, measure the entire length of the conveyor belt to the nearest .01 ft. Place an easily identifiable mark on the conveyor belt (paint mark) and on a reference point of the conveyor (idler). Run the belt at full speed and carefully time one or more complete revolutions (in seconds) of the belt. (Use a number of revolutions that will allow for a minimum test time of at least 6 seconds.)

This procedure allows direct entry of parameters that would otherwise be generated by the acquire Test Duration modes. This menu is generally used when the operator cannot see the belt while standing at the front panel.

If MANUAL is pressed, the system prompts the operator to run the belt at its maximum speed. Then press CONTINUE.

Pressing ABORT returns the screen to Cal Data Scroll 11.

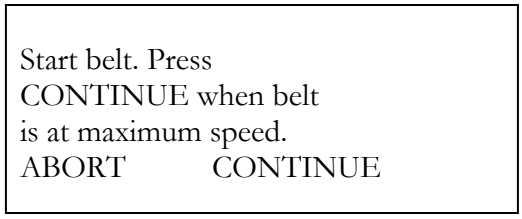

Password: Service

The operator is prompted to enter the length of one belt revolution.

Pressing ABORT returns the screen to Cal Data Scroll 11.

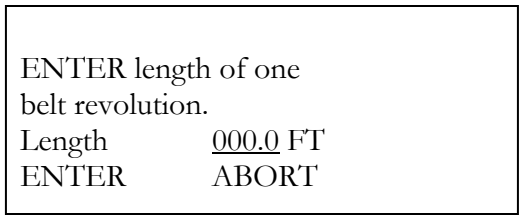

Password: Operator

If ENGLISH or MIXED:		**If METRIC:**	
Default:	**200.0 Ft**	**Default:**	**200.0 m**
Min:	**1.0 Ft**	**Min:**	**1.0 m**
Max:	**10000.0 Ft**	**Max:**	**10000.0m**

The number of belt revolutions to be timed is than entered.

Pressing ABORT returns the screen to Cal Data Scroll 11.

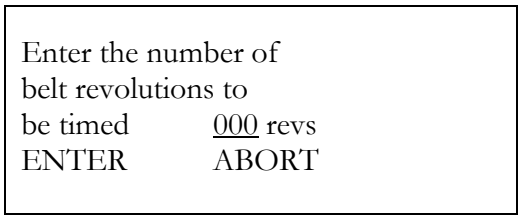

Default: **1**

Min: **1**

Max: **100**

The next entry is the time per revolution.

Pressing ABORT returns the screen to Cal Data Scroll 11.

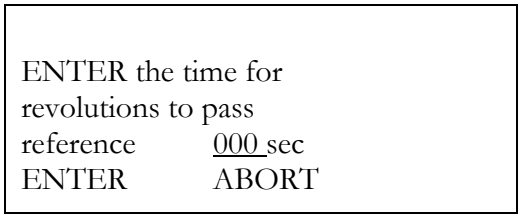

Default: **30 sec**

Min: **1 sec**

Max: **16200 sec**

When ENTER is pressed, the system times the belt travel according to the above entered parameters.

Pressing ABORT returns the screen to Cal Data Scroll 11.

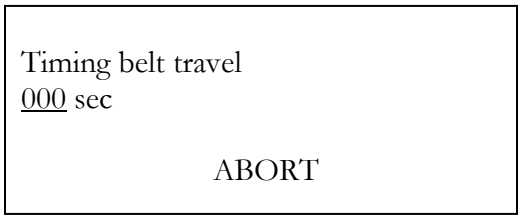

When test duration test is finished, the new values for length of belt and time are displayed. Press CONTINUE.

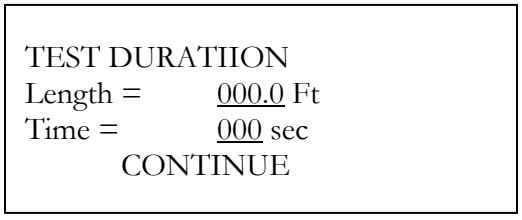

9. Defining Auto Zero Tracking

A periodic auto zero procedure can be automatically executed by the system if the Auto Zero Tracking option is set to YES. If YES is selected, Auto Zero Tracking is enabled anytime the belt is running at a flow rate less than the range setting selected below.

- CAL DATA SCROLL 12 - Auto zero tracking > Yes < CHOICE ENTER	Password: Operator

Default: **No**

Selections: **Yes, No**

The following scrolls are only visible if Auto Zero Tracking is enabled.

Define the range of action of the AZT with reference to the scale capacity (rate). A flow rate greater than the range setting deactivates AZT.

- CAL DATA SCROLL 12A - Auto zero tracking Range ±4.0 % ENTER	Password: Operator

Default: **±4%**

Min: **±0%**

Max: **±10%**

Define the maximum amount of zero error (with reference to the scale capacity) that AZT can automatically compensate.

- CAL DATA SCROLL 12B - Auto zero tracking Max dev. ±4.0 % ENTER	Password: Service

Default: **±4%**

Min: **±0%**

Max: **±10%**

10. Entering the Speed Capacity

The user can ENTER the maximum speed capacity or ACQuire it. To acquire the speed, run the belt at maximum speed and then press the ACQ key.

- CAL DATA SCROLL 13 - Max speed capacity 200.00 FPM ENTER ACQ	Password: Service

if ENGLISH or MIXED

Default: **200.0 FPM**

Min.: **1.0 FPM**

Max: **2000.0 FPM**

if METRIC:

Default **1.0 m/s**

Min: **0.1 m/s**

Max: **10 m/s**

The maximum speed capacity is used to scale the current output when used to monitor the speed, and to allow entering the speed alarms in%.

11. Defining the Number of Calibrations

    This screen allows the operator to specify the number of calibrations to be defined. If a number higher than 1 is entered, the digital inputs for calibration selection can be defined.

- CAL DATA SCROLL 14 - Number of calib. 1 ENTER	Password: Service

Default: **1**

Min: **1**

Max: **10**

Main Menu 3

Main Menu 3 is used for protecting and un-protecting the system using passwords, and to perform diagnostic and test functions. The diagnostic functions can only be operated after removing all password protection, and should only be used by experienced technical personnel. Most test functions are not password protected.

- MAIN MENU 3 -
Press MENU for more
PROT DIAG TEST

The PROTection menu only becomes visible after passwords have been defined (see the Diagnostics Menu).

Changing the Protection Level

The Micro-Tech 2000 has three protection levels to which specific passwords are related.

The protection levels and the passwords are defined using the following scheme:

Protection	Password	Status
NONE	SERVICE	The system is totally unprotected, all data can be read or changed.
LIMITED	OPERATOR	Operator functions and data are unprotected. All setup and calibration data are protected except zero calibrate.
PROTECTED		The system is totally protected, process data can be read, no change allowed.

A SERVICE password is required to access the NONE level. An OPERATOR or a SERVICE password is required to access the LIMITED level.

Use the NONE key to access the NONE protection level. If the current level is not already NONE, the SERVICE password is required.

Use the LTD key to access the limited protection level. If the system is in level NONE, change is immediate. If it is in PROT level, the SERVICE or OPERATOR password is required. Use the PROT key to access the protected level. No password is required.

```
- PROTECTION LEVEL -
> NONE <

NONE          LTD           PROT
```

Default: NONE

Selections: NONE, LIMITED, PROTECTED

Password:

from NONE to LTD or PROT:	**not required**
from LTD to PROT:	**not required**
from LTD to NONE	**SERVICE**
from PROT to NONE:	**SERVICE**
from PROT to LTD:	**OPERATOR or SERVICE**

Pressing the soft key gives entry into desired level. Going from a low level to a higher level forces the password entry.

1. On Line Procedure for Changing Protection Level

   The protection level can be temporarily changed by entering a password "on the fly" during normal operation. When the operator tries to enter a variable or select a function which is password protected, and the password is installed, the following screen is displayed.

```
    - SYSTEM PROTECTED -
PLEASE ENTER
PASSWORD _____________
                ENTER
```

   The operator can enter either the OPERATOR or the SERVICE passwords. However, if the operator enters the OPERATOR password and the variable or function requires the SERVICE password instead, the access is denied and the following screen is displayed.

```
    - SYSTEM PROTECTED -
PLEASE ENTER SERVICE
PASSWORD _____
                ENTER
```

If the operator fails to enter the correct password, the following screen appears.

```
    - SYSTEM PROTECTED -
INVALID PASSWORD
ACCESS DENIED
                RETURN
```

Pressing RETURN returns the program to the previous function. If the operator enters the correct password, the previous screen appears and access is allowed.

When the protection level is changed using the on line procedure, the system automatically returns to protected status if no keyboard entries are made within 60 seconds.

Diagnostics

1. A/D Raw Data

Diagnostic Scroll 1 shows the raw data from the A/D converter of the integrator (A/D gross) and the net value after the zero constant has been subtracted. The range of the A/D converter is from 0 to 131070 numbers.

```
    - DIAGNOST. SCROLL 1 -

A/D gross      00000
A/D net         0000
```

Password: Service

2. Readout Load Cell mV

   The system displays the mV output of the load cell. The reading must be positive and must increase when the load increases.

- DIAGNOST. SCROLL 2 - Weight on load cell 0.000 mV CALIB	Password: Service

If CALIB is pressed, the next two scrolls are displayed and can be used to fine tune the readout of mV/V.

- DIAGNOST. SCROLL 2A - Loadcell output zero 0000000 A/D counts ENTER	Password: Service

Default: **15**

Min: **0**

Max: **10000**

- DIAGNOST. SCROLL 2B - Loadcell output span 0000000 ENTER	Password: Service

Default: **3497**

Min: **0**

Max: **30000**

3. Change Prescaler

   The prescaler is a number which is used to divide the incoming frequency of the speed sensor(s) to achieve a usable input frequency of approximately 30 Hz. The prescaler is automatically calculated and should never be altered by the user. However, a direct entry has been made possible for quick replacement of the integrator.

- DIAGNOST. SCROLL 3 -	Password: Service
Prescale 00000	
00000.0 pls/min	
ENTER CALIB	

Default: **10**

Min: **1**

Max: **1000**

If CALIB is pressed, the following screens appear.

- DIAGNOST. SCROLL 3A -	Password: Service
Test duration total	
pulses 0000000	
ENTER	

Default: **900**

Min: **1**

Max: **1000000**

- DIAGNOST. SCROLL 3B -	Password: Service
Test duration total	
length 00000.0 ft	
ENTER	

if ENGLISH or MIXED

Default:	**200 feet**
Min:	**1 feet**
Max:	**100000 feet**

if METRIC:

Default	**200 m**
Min:	**1 m**
Max:	**100000 m**

4. Change Passwords

   The password can be changed by entering a new one. The user can enter up to eight characters (numeric keys entries). The entered numbers are not echoed on the screen. Pressing just the ENTER key removes the password.

Password: Service

Default: No password

After the password has been entered, the system asks for confirmation. This prevents losing access control due to a typing mistake while entering passwords.

If the password entered the second time matches the first, the following message confirms the entry.

```
    - DIAGNOST. SCROLL 4 -
NEW PASSWORD
ACQUIRED
RETURN
```

If the two passwords do not match, the system does not accept the new password.

```
        - DIAGNOST. SCROLL 4 -
INVALID PASSWORD

RETURN
```

```
        - DIAGNOST. SCROLL 5 -
ENTER OPERATOR
PASSWORD  ********
MENUENTER
```

Password: Operator

Default: No password

The OPERATOR password is double checked similarly to the service one.

It is strongly suggested to write down the password and preserve a copy in a safe place. If the password is forgotten, refer to Chapter 4 to remove a forgotten password.

5. Display Software Version

   The software version is displayed for reference only.

- DIAGNOST. SCROLL 6A -
Main software
version:
33.xx.xx.xx-B1

6. Setup Date and Time

   This section only applies if a COMM board is installed. The user can set the current date and time. A battery operated clock calendar then maintains time and date even if power is removed. Day, Month, and Year are entered in sequence.

- DIAGNOST. SCROLL 7 -	Password: Service
Date: DD-MM-YYYY	
DAY: DD	
ENTER	

Default: **00-00-0000**

Min: **01-01-0000**

Max: **12-31-2096**

Time is entered in a similar way. The AM/PM key is used when time is in the English mode. See Display Scroll 7 in Main Menu 2.

- DIAGNOST. SCROLL 8 -	
Time:	HH:MM
HOURS:	HH
ENTER	AM/PM

	24 hour	am/pm
Default:	**00.00**	**01.00**
Min:	**00.00**	**01.00**
Max:	**23:59**	**12:59**

7. Check Hardware Configuration

   The system automatically recognizes when optional boards are installed. The following scrolls are used to show the configuration. Remember that when a board is acknowledged, the related information stays in memory even if the board is removed, until the operator deletes it by responding YES to the message shown at power on.

   The following screen is displayed for each board installed in each slot.

```
    - DIAGNOST. SCROLL 9 -
Board type slot #1

BOARD TYPE
```

```
    - DIAGNOST. SCROLL 10 -
Board type slot #2

BOARD TYPE
```

BOARD TYPE can be:

- Analog I/O	Optional analog input output board. - #2 Current outputs - #2 Voltage inputs
- Current Out	Optional current output board. - #1 Current output
- Communication A	Serial communication board (RS232, RS485)
- Communication B	Allen-Bradley Remote I/O PROFIBUS-DP

8. Force Cold Start

   This scroll is used to force a cold start of the instrument in the event the software becomes corrupted. Factory default constants will be installed when the instrument restarts; all field entry data will be replaced.

```
    - DIAGNOST. SCROLL 15 -
Force cold start

ENTER
```

Tests

1. Lamp Test

   Press START to begin a Lamp Test of the integrator. All LED's and digits of the display blink for a number of seconds.

```
    - TEST SCROLL 1 -
LAMP TEST

START
```

2. Self Test of the Unit

The system can perform some internal test functions, which can be used to detect malfunctions to the hardware devices.

```
      - TEST SCROLL 2 -
Internal test of
microprocessor.
START
```

Password: Service

After START is pressed, the following screens are displayed in sequence.

```
      - TEST SCROLL 2A -
Testing ROM
Test PASSED
```

```
          - TEST SCROLL 2B -
Testing RAM
Test PASSED
```

The message "Test PASSED" is displayed if the test runs correctly. If something wrong is detected, then the message "Test FAILED" is displayed, and the soft key CONTINUE is shown. The operator has to press the key to go on to the next test.

NOTE. Test 2C requires a hardware jumper to be installed between serial in and serial out pins of the mother board. Since the jumper is not normally in place, a "Test FAILED" message at the end of Test 2C is normally displayed.

3. Test Digital Inputs

The next screen is used to check the digital input circuitry. The display shows a 1 if the specific input is closed, 0 if open. If more digital I/O boards are installed, the NEXT soft key appears, allowing the operator to scroll between boards.

```
    - TEST SCROLL 3 -
Dig input test
Slot #0          ----0000--
                 NEXT
```

Slots are numbered 1 to 6, slot 0 is the mother board. Inputs are shown from right to left.

4. Test Digital Outputs

This test shows the status of each digital output and allows the operator to force the output for testing purposes. The output, when forced, stays on until the CLEAR soft key is pressed or the Run Menu is entered. If an output is forced and the scroll key is used for reaching some other menu, the output stays in the forced status until RUN is pressed. This allows the operator to check inputs while outputs are still in the forced status.

```
    - TEST SCROLL 4 -
Dig output test
output #1:          ON/OFF
ENTER               ON/OFF
```

Password: Service

To force an output, enter the desired number followed by ENTER. Then use the ON/OFF key to force it to the ON or OFF status. After the output has been forced, the CLEAR soft key appears in the middle position.

Slots are numbered 1 to 6, slot 0 is the mother board.

CAUTION: Forcing the digital outputs may cause machinery to start. After the user tried to force the output, the following message is displayed.

```
WARNING
EQUIPMENT  MAY START

CONTINUE          ABORT
```

WARNING: If the user presses continue, be aware the action may cause damage or injury. If the user presses ABORT, the system automatically returns to the previous scroll.

5. Test Current Outputs

This section tests the current output board. The board has two current output channels. Current outputs can be PID loops, rate, load or speed out.

```
    - TEST SCROLL 5 -
Current output #1
should be      00.0 mA
ENTER          CLEAR
```

Password: Service

Default: **0.0 mA**

Min: **0.0 mA**

Max: **20.0 mA**

To force the output, enter the desired number of milliamps and press ENTER. Press CLEAR to free the mA channel.

If the board has two channels, the following screen is shown.

```
    - TEST SCROLL 6 -
Current output #2
should be 00.0 mA
ENTER          CLEAR
```

Password: Service

Default: **0.0 mA**

Min: **0.0 mA**

Max: **20.0 mA**

6. Test Current Inputs

   The following screen is displayed only if an analog input board is detected, and shows the status of each analog input channel.

```
    - TEST SCROLL 7 –
Current input
#1              00.0 v
#2              00.0 v
```

7. Test Communication A

   The following screen allows checking the installed serial lines. Maximum line number is 3; the first is used to interface the Digitizer, the others can be used for printing or high level communications. Digit soft key identifies the first dedicated line, “Port 1” and “Port 2” soft keys are shown only if a second and third COMM board is detected.

```
    - TEST SCROLL 8 -
Test communication A                    Password: Service

DIGIT       PORT 1       PORT 2
```

   By pressing the PORT 1 or the PORT 2 soft key, the test is initiated. A test pattern is sent out on the TX output and read on the RX input. If the test fails, the message "Test Failed" is shown; otherwise, the message "Test Passed" is displayed.

NOTE: This test requires a hardware jumper to be installed between terminals TB5-8 (RX) and TB5-9 (TX) on the communication board.

8. Test Communication B

   This test is similar to the previous one but works for the field bus version of the communication board.

- TEST SCROLL 9 - Test communication B START	Password: Service

9. Test the CPU Serial Line

- TEST SCROLL 12 - Test CPU serial line START	Password: Service

If START is pressed, the system performs a test of the serial line of the CPU board.

NOTE: The CPU serial line is not implemented in the current hardware, therefore the normal response is TEST FAILED.

10. Test the Keyboard and Switches

- TEST SCROLL 13 - Keyboard + switches Key: _____ Switches: 00000000

Press the RUN key twice to exit. All other keys, including MENU, are displayed but not executed.

Main Menu 4

Main Menu 4 is dedicated to the definition of the input output (I/O) and alarms.

```
        - MAIN MENU 4 -
Press MENU for more
I/O             ALARMS
DEFINE          DEFINE
```

I/O Definition

The input output section of the system is fully configurable. All inputs and outputs are conventionally numbered and can be assigned to physical input and output terminals depending on the needs. The following section explains how to configure I/O. However, the standard configuration as provided by the factory is normally satisfactory.

1. Define Current Outputs

   The following menus are shown for configuring the current output(s). Use the CHOICE key to change the variable and the ENTER key to confirm. The NEXT key allows the operator to set up to four (4) current outputs if installed.

```
    - I/O DEF SCROLL 1 -
Current Output define
#1 > Rate <
CHOICES      ENTER        NEXT
```

Password: Service

Default: **(1st RATE, (2nd) Load**

Selections: **OFF, RATE<LOAD, SPEED**

If the selection of the previous screen is not OFF, the operator can set up the range, delay and damping of the current output. The range is selectable between the standard 0 to 20 mA and 4 to 20 mA both in direct and reverse mode. Select 0-20 or 4-20 if an increase in current is desired for any increase of the variable. Select 20-0 or 4-20 if a decrease of current is desired for any increase of the variable.

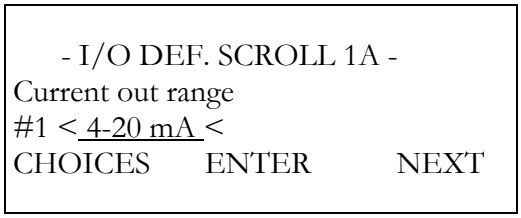

Default: **(1st) 4-20 mA, (2nd) 4-20 mA, (3rd) 4-20 mA, (4th) 4-20 mA**

Selections: **0-20 mA, 4-20 mA, 20-0 mA, 20-4 mA**

Each current output can be delayed. This is typically needed in blending systems, to correct transport time differences. The delay can be set either in time or in length of belt travel. Belt travel is suggested for variable speed applications. Use the T/L soft key to switch between time and length.

- I/O DEF SCROLL 1B -		
Current out delay		Password: Service
#1 0 sec		
ENTER	T/L	NEXT

Default: **(1st) 0 sec, (2nd) 0 sec, (3rd) 0 sec, (4th) 0 sec**

if TIME:	**Min:**	**0 sec**
	Max:	**300 sec**
if LENGTH:		
	Min:	**(1st) 0 Ft, (2nd) 0 Ft, (3rd) 0 Ft, (4th) 0 Ft**
	Max:	**10000 FT**
Metric	**Min:**	**0 M**
	Max:	**300 M**

A damping factor can also be selected for each current channel. The damping factor is the time for the output to stabilize after a step change. This damping only affects the current output, not the displayed variable, which has a separate damping factor, selectable in Main Menu 2, Display.

- I/O DEf SCROLL 1C -		
Current out damping		Password: Operator
#1	4	
ENTER	NEXT	

Default: **(1st) 4 sec, (2nd) 4 sec, (3rd) 4 sec, (4th) 4 sec**

Min: **0 sec**

Max: **400 sec**

UP and DOWN arrows move between range, delay and damping. NEXT moves to the next current output.

2. Define Analog Inputs

NOTE. The analog input hardware is factory configured for current (0-20mA) in utilizing a shunt (W3 or W4) and 250 ohm resistor (R-21 and R-22 or R-28 and R-29) across the input. To use with a voltage input (0-5 VDC), the corresonding shunt (W3 for Input #1 or W4 for Input #2) must be cut.

If an analog input board is installed, the following screens are displayed. Analog inputs can be used for measuring the moisture of the material or the conveyor angle of inclination.

Moisture compensation is performed on the belt loading, and affects both rate and totals. Only during material calibration with material is moisture compensation suspended, so that the totalized quantity can be directly compared to the weight obtained on a static scale. The moisture compensation is executed before adding to total.

Angle compensation dynamically adjusts span when conveyor inclination changes. Use the CHOICES key to select the action of the analog input, use ENTER to confirm, use CALIB to calibrate the analog input signal.

```
    - I/O DEF SCROLL 2 -
Analog Input #1 def.
> Inclination <
CHOICES     ENTER       CALIB
```

Password: Service

Default: **OFF**

Selections: **OFF, INCLIN(ATION), MOISTURE**

```
        - I/O DEF SCROLL 3 -
Analog Input #2 def.
> Moisture <
CHOICES     ENTER       CALIB
```

Password: Service

Default: **OFF**

Selections: **OFF, INCLIN(ATION), MOISTURE**

a. Setup Moisture Compensation Input

If an analog input has been programmed for reading the moisture signal and CALIB was pressed, the following screens appear. The user can calibrate the input signal by entering the equivalence between percent of moisture and voltage on two points. Use the %MOIST key to enter the percent of moisture, use the VOLT key to enter the corresponding number of volts, and confirm with ENTER.

- I/O Def SCROLL 2A/3A - Moisture input calib. 0.0 %M =2.0 V ENTER %MOIST VOLTS	Password: Service

Default: **0.0 % 0.0 V**

Min: **0.0% 0.0 V**

Max: **20.0% 2.5 V**

Do the same with the second point shown below.

- I/O DEF SCROLL 2B - Moisture input calib. 20.0 %M =5.0 V ENTER %MOIST VOLTS	Password: Service

Default: **10.0% 5.0 V**

Min: **1.0% 2.5 V**

Max: **20.0% 5 V**

b. Setup Inclination Compensation Input

If an analog input has been programmed for reading the angle signal and CALIB was pressed, the following screens appear. The user can calibrate the input signal by entering the number of degrees corresponding to the minimum signal (0 mA or 4 mA) and the number of degrees corresponding to the maximum signal (20 mA). Use the +/- key to enter negative numbers, and confirm with ENTER.

```
   - I/O DEf SCROLL 3A -
Conveyor low posit
00.0 Degrees
ENTER        +/-
```

Password: Service

Default: **0.0 Degrees**

Min: **-25 Degrees**

Max: **+25 Degrees**

```
   - I/O DEf SCROLL 3B -
Conveyor high posit
00.0 Degrees
ENTER        +/-
```

Password: Service

Default: **0.0 Degrees**

Min: **-25 Degrees**

Max: **+25 Degrees**

3. Define Digital Inputs

   Digital inputs can be programmed. The following screen shows one logical function per time, and allows the user to assign it to a physical input. The NEXT key scrolls between the logical functions. The NC/NO key selects the Normally Open (NO) or Normally Closed (NC) status of the input. Normally Open means the input is inactive when disconnected. To program a function, scroll with NEXT until the function is displayed, then enter the physical input number and confirm with ENTER, finally scroll with NC/NO until the desired mode is displayed. By assigning a function to 0, the function is disabled.

```
    - I/O DEF SCROLL 4 -
Dig. Input def.
Ext Alarm      10 NC
ENTER          NC/NO        NEXT
```

Password: Service

The following table shows the available logical functions.

Selections:	**Default:**	
External alarm 1	0 NO	
External alarm 2	0 NO	
External alarm 3	0 NO	
Print	0 NO	(Only if COMM installed & set to printer)
Belt Running (Conveyor run)	3 NC	
Reset Totals	0 NO	
Reset Alarms	0 NO	
Auto Zero	0 NO	
Clip Detector	0 NO	
Batch Start	0 NO	(Only if Load Out installed)
Batch Stop	0 NO	(Only if Load Out installed)
Batch Standby	0 NO	(Only if Load Out installed)

Digital inputs are numbered using the following criteria.

1 = Speed Input TB3-10 Common, 11 Power & 12 Signal

2 = Assignable Mother Board Input #2 TB2-9 & 10

3 = Assignable Mother Board Input #3 TB2-11 & 12

WARNING: CHANGING THE DEFINITION OF THE DIGITAL INPUTS MAY CAUSE MACHINERY TO START. AFTER THE USER TRIES TO CHANGE A DEFINITION, THE FOLLOWING MESSAGE IS DISPLAYED.

WARNING EQUIPMENT MAY START CONTINUE ABORT

WARNING: If the user presses CONTINUE, be aware the action may cause damage or injury. If the user presses ABORT, the system returns to the previous scroll.

4. Define Digital Outputs

Digital outputs can be programmed. The following screen shows one logical function per time, and allows the user to assign it to a physical output. The NEXT key scrolls between the logical functions. The NC/NO key selects the Normally Open (NO) or Normally Closed (NC) status of the output. Normally Open means the output is not energized in normal conditions. To program a function, scroll with NEXT until the function is displayed, then enter the number of the physical output and confirm with ENTER, finally scroll with NC/NO until the desired mode is displayed. By assigning a function to 0, the function is disabled.

- I/O DEF SCROLL 5 -		
Dig. Output def.		
Alarm:	0	NC
ENTER	NC/NO	NEXT

Password: Service

The following table shows the available logical functions.

Selections:	**Default:**	
Alarm	2 NC	
Shut down	0 NO	
Ready	1 NC	
High Load	0 NO	(Only if Load Alarm enabled)
Low Load	0 NO	(Only if Load Alarm enabled)
High Rate	0 NO	(Only if Rate Alarm enabled)
Low Rate	0 NO	(Only if Rate Alarm enabled)
High Speed	0 NO	(Only if Speed Alarm enabled)
Low Speed	0 NO	(Only if Speed Alarm enabled)
Totalizer	3 NO	
Batch Preset	0 NO	(Only if Load Out installed)
Batch End	0 NO	(Only if Load Out installed)
Load WTS (Weights)	0 NO	

Digital outputs are numbered using the following criteria.

1 = Assignable Mother Board output #1 TB2-7 & 8

2 = Assignable Mother Board output #2 TB2-5 & 6

3 = Assignable Mother Board output #3 TB2-3 & 4

4 = Fault output #4 TB2-1 & 2

WARNING: CHANGING THE DEFINITION OF THE DIGITAL OUTPUTS MAY CAUSE MACHINERY TO START. AFTER THE USER TRIES TO CHANGE A DEFINITION, THE FOLLOWING MESSAGE ID DISPLAYED.

```
WARNING
EQUIPMENT MAY START

CONTINUE          ABORT
```

WARNING: If the user presses CONTINUE, be aware the action may cause damage or injury. If the user presses ABORT, the system returns to the previous scroll.

5. Define Remote Totalizer Output

   If the TOTALIZER output function is assigned to an output, the following screens allow the user to set up related parameters. Set the divider according to the maximum rate the scale will run. The divider is entered in totalization units (T.U.). The pulse frequency generated in normal conditions should not exceed 10 Hz. Higher frequencies are possible, however they do not improve accuracy.

```
    - I/O DEf SCROLL 6 -
Remote counter div.
1
ENTER
```

Password: Service

Default: **1**

Min: **0.01**

Max: **100**

Enter the pulse width in seconds of the totalizer. A higher pulse width limits the maximum frequency. The default 0.1 sec. is recommended for frequencies lower than 5 Hz.

- I/O DEF SCROLL 7 - Remote counter pulse width 0.100 sec ENTER	Password: Service

Default: **1 sec**

Min: **0.005 sec**

Max: **1 sec**

6. Clip Detector Option

The clip detector option reduces flow rate errors on light loaded belts caused by conveyor belt weight variances. The clip detector is normally a proximity switch that senses a metal target attached to the belt. In manual mode, the clip detector freezes the flow rate when the clip is detected and maintains it frozen for the programmed length. Totalization is not affected. In automatic, the Integrator automatically detects tare variations and compensates for them.

If the clip detector is assigned to one digital I/O input, the following screens appear.

- I/O DEF SCROLL 10 - Clip detector mode MANUAL CHOICE ENTER	Password: Service

Default: **MANUAL**

Selections: **MANUAL, AUTO**

In the MANUAL mode, the user must enter the length of belt which is affected by the belt splice. The system freezes the belt loading when the clip is detected and maintains it frozen until the specified belt length has passed.

- I/O DEF SCROLL 10A - Clip detect. length 00.00 ft ENTER	Password: Service

if ENGLISH or MIXED

Default: **1.0 Ft**

Min: **0.5 Ft**

Max: **10 Ft**

if METRIC:

Default **0.30 m**

Min: **0.10 m**

Max: **3.00 m**

If the AUTO mode is selected, the system automatically detects belt weight variations and compensates for them. Auto Zero Tracking must be enabled. The Auto Zero Tracking then stores in memory a table of tare values which are used to compensate the tare variations point by point. In addition, when the Acquire Test Duration is run in the

ACQ FULL mode, the COUNT key is not displayed because the system automatically counts the clip detector pulses. (For proper operation, there can only be one clip used for the entire belt length.)

7. Define Load WTS (Weights)

   This feature activates a lowering/lifting mechanism for automatically loading and unloading the scale with test weights, when the auto span function is initiated from remote.

Alarms Definition

The alarms of the Micro-Tech 2001 can be programmed. Process alarms such as low and high rate can be set to the desired range. In addition, all alarms can be defined to be:

ALARM	**When an alarm occurs, the front panel status indicator illuminates. An ALARM message flashes in the lower, right hand RUN display. Pressing ALARM displays the alarm. Time and date are also displayed if the optional COMM board is installed.** **Pressing RESET clears the alarm message if the alarm parameter has cleared. If the alarm parameter has not cleared, the message "ACK" appears when RESET is pressed. When the alarm parameter clears, the alarm indication clears.** **Pressing RUN at any time returns the operator to the RUN menu.** **Alarms can be automatically printed if the print option is enabled.**
SHUT DOWN	**The alarm handler operates as above except the READY status indicator goes off at the same time as the ALARM status indicator comes on.** **In the I/O definition scroll, alarm and ready can be assigned to N/C or N/O physical outputs. The output activates and deactivates at the same time as the front panel status indicators.**
NONE	**Alarm is deactivated.**

1. Define Rate Alarm

   Use the CHOICE key to turn on or off the rate alarm. Confirm with ENTER.

- ALARM SCROLL 1 -	
Rate Alarm	Password: Operator
> NO <	
CHOICE ENTER	

Default: **NO**

Selections: **YES, NO**

If the selection in the previous screen was YES, enter the low and high set points for the alarm. Also enter the desired delay time before the alarm is monitored. The UNITS key allows the user to specify the set points in engineering units. The% key selects set points in percent. The SET/DLY switches between the setpoint and the delay time.

- ALARM SCROLL 1A -	
Low rate set	Password: Operator
10 % 105 sec	
ENTER SET/DELAY	
UNITS / %	

Default:	**10%**	**10 sec**
Min:	**0%**	**0 sec**
Max:	**103%**	**90 sec**

- ALARM SCROLL 1B -	
High rate set	
100 %	10 sec
ENTER	SET/DELAY
UNITS/%	

Password: Operator

Default: **100%** **10 sec**

Min: **0%** **0 sec**

Max: **103%** **90 sec**

2. Define Load Alarm

   Use the CHOICE key to turn on or off the belt loading alarm. Confirm with ENTER.

- ALARM SCROLL 2 -	
Load Alarm	
> NO <	
CHOICE	ENTER

Password: Operator

Default: **NO**

Selections: **YES, NO**

If the selection in the previous screen was YES, enter the low and high set points for the alarm. Also enter the desired delay time before the alarm is monitored. The UNITS key allows the user to specify the set points in engineering units, the % key selects percent. The SET/DELAY switches between the setpoint and the delay time.

- ALARM SCROLL 2A -	
Low load set	
10 % W.U	10 sec
ENTER	SET/DELAY

Password: Operator

Default: **10%** **10 sec**

Min: **0%** **0 sec**

Max: **105%** **90 sec**

```
        - ALARM SCROLL 2B -
High load set                    Password: Operator
 100 %          10 sec
ENTER     SET/DELAY   UNITS/%
```

Default: **100%** **10 sec**

Min: **0%** **0 sec**

Max: **150%** **90 sec**

3. Define Speed Alarm

   Use the CHOICE key to turn on or off the belt speed alarm. Confirm with ENTER.

```
     - ALARM SCROLL 3 -
Speed Alarm                      Password: Operator
> NO <
```

Default: **NO**

Selections: **YES, NO**

If the selection in the previous screen was YES, enter the low and high set points for the alarm. Also enter the desired delay time before the alarm is monitored. The UNITS key allows the user to specify the set points in engineering units, the % key selects percent. The SET/DELAY switches between the setpoint and the delay time.

- ALARM SCROLL 3A - Low speed set 10 % ___ sec ENTER SET/DELAY UNITS/%	Password: Operator

Default:	**10%**	**10 sec**
Min:	**0%**	**0 sec**
Max:	**105%**	**90 sec**

- ALARM SCROLL 3B - High speed set 100 % 10 sec ENTER SET/DELAY UNITS/%	Password: Operator

Default:	**100%**	**10 sec**
Min:	**0%**	**0 sec**
Max:	**150%**	**90 sec**

4. Setup Alarm Modes

   The following message is displayed for three seconds.

```
- ALARM SCROLL 5 -
- ALARM DEFINITION -
Use NEXT key or
enter alarm number
```

After three seconds, the following screen is displayed. The user can use the CHOICE soft key to select the desired mode between ALARM (just a warning message), SHUT DOWN (Warning plus fault output) and NONE (no action). Confirm with ENTER. Use the NEXT key to scroll between alarms, or enter the alarm number.

```
ALARM NUMBER # 1
Clock Fail
set as <ALARM<
CHOICE        ENTER          NEXT
```

Alarms are listed in Chapter 4, Maintenance.

Main Menu 5

Main Menu 5 is dedicated to the serial options. COMM A is used to set up the serial line of the optional board Communication A, and PRINT is used for setting up the printer output. Main Menu 5 does not appear unless an optional COMM A is installed.

```
          - MAIN MENU 5 -
Press MENU for more

COMM A                  PRINT
```

Communication A Scroll

The communication board A has one serial channel, which can be configured using jumpers as an RS232 or an RS485 channel. The serial channel can be used for printing or for a serial communication with an intelligent device such as a PLC or a PC. Two boards can be installed and programmed, typically one for the printer and one for the supervisor.

The following screens define the communication parameters for the first and the second channel.

```
          - COMM. A SCROLL 1 -
Baud rate port #1
> 2400 <
CHOICE        ENTER
```

Password: Service

Default: **9600**

Selections: **110, 150, 300, 600, 1200, 2400, 4800, 9600, 19200**

- COMM. A SCROLL 2 - Set parity port #1 > No parity < CHOICE ENTER	Password: Service

Default: **NO PARITY**

Selections: **EVEN PARITY, ODD PARITY, NO PARITY**

- COMM. A SCROLL 3 - Stop bits port #1 > 1 stop bit < CHOICE ENTER	Password: Service

Default: **1 STOP BIT**

Selections: **1 STOP BIT, 2 STOP BITS**

- COMM. A SCROLL 4 - Wordlength port #1 > 8 bits < CHOICE ENTER	Password: Service

Default: **8 BITS**

Selections: **7 BITS, 8 BITS**

The next screen defines the port use. Some commonly used protocols are implemented in the system. Possible selections are:

PC-MASTER	**Thermo proprietary protocol: Multi Drop, Master Slave.**
SIEMENS 3964R	**A proprietary protocol of Siemens. Point to point, Multi Master.**
ALLEN BRADLEY DF1	**A proprietary protocol of Allen Bradley. Multi Drop, Master Slave.**
MODBUS	**A proprietary protocol of AEG. Multi Drop, Master Slave.**
PRINTER	**Not a protocol, selects printer output**

- COMM. A SCROLL 5 - Protocol port #1 > PC Master < CHOICE ENTER	Password: Service

Default: **MODBUS**

Selections: **PC-MASTER, SIEMENS 3964R, ALLEN BRADLEY DF1, AEG MODBUS, PRINTER, AUTO-MAT**

If the selected protocol is not PRINTER, the following screens define the ADDRESS of the device in the multi drop line, and the access permission from the remote supervisor. If NONE is selected, the supervisor has full access to the device. If LIMITED is selected, the supervisor only accesses those variables that are accessible with the OPERATOR password. If PROTECTED is selected, the unit is write protected.

- COMM. A SCROLL 5A - Clear to send #1 > disabled < CHOICE ENTER	Password: Service

Default: **DISABLED**

Selections: **DISABLED, ENABLED**

- COMM. A SCROLL 6 - Address port #1 > 1 < ENTER	Password: Service

Default: **1**

Min: **1**

Max: **255**

- COMM. A SCROLL 7 - Access prot. port #1 > None < CHOICE ENTER	Password: Service

Default: **NONE**

Selections: **NONE, LIMITED, PROTECTED**

If a second communication board is installed, the following screen appears. These screens operate exactly as the ones dedicated to the communication board 1.

- COMM. A SCROLL 8 - Baud rate port #2 > 2400 < CHOICE ENTER	Password: Service

Default: **9500**

Selections: **110, 150, 300, 600, 1200, 2400, 4800, 9600, 19200**

- COMM. A SCROLL 9 - Parity port #2 > No parity < CHOICE ENTER	Password: Service

Default: **NO PARITY**

Selections: **NO PARITY, EVEN PARITY, ODD PARITY**

- COMM. A. SCROLL 10 - Stop bits port #2 > 1 stop bit < CHOICE ENTER	Password: Service

Default: **1 STOP BIT**

Selections: **1 STOP BIT, 2 STOP BITS**

- COMM. A SCROLL 11 - Wordlength port #2 > 8 bits < CHOICE ENTER **Default: 8 BITS**	Password: Service

Selections: **7 BITS, 8 BITS**

- COMM. A SCROLL 12 -	Password: Service
Protocol port #2 > PC Master < CHOICE ENTER	

Default: **MODBUS**

Selections: **PC MASTER, SIEMENS 3964R, ALLEN BRADLEY DF1, MODBUS, PRINTER**

- COMM. A SCROLL 12A -	Password: Service
Clear to send #2 > disabled < CHOICE ENTER	

Default: **DISABLED**

Selections: **DISABLED, ENABLED**

- COMM. A SCROLL 13 -	Password: Service
Address port #2 1 ENTER	

Default: **1**

Min: **1**

Max: **255**

- COMM. A SCROLL 14 -	Password: Service
Access prot. port #2 > None < CHOICE ENTER	

Default: **NONE**

Selections: **NONE, LIMITED, PROTECTED**

Print

The Micro-Tech 2000 integrator has a fully programmable printer format. The following section explains how to program it according to the specific needs.

1. Define Handshaking

   The system can be configured to operate without any handshake (NONE), or using the Clear to Send signal (CTS) or the XON-XOFF sequence. Refer to the printer instruction manual to define which selection is required. The selection NONE is only used for testing purposes. It is not recommended for normal use. If NONE is selected, the system is not able to recognize if the printer is on line or not, or if the paper is empty.

   The most commonly used protocol is the CTS, which is a signal generated by the printer to indicate whether it is ready to receive data or not.

- PRINTER SCROLL 1 - Handshaking > None < CHOICE ENTER	Password: Service

Default: **NONE**

Selections: **NONE, CTS, XON-XOFF**

Different printers use different end of line patterns. Select the one you need for your printer.

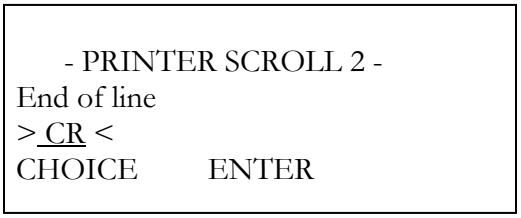

Password: Service

Default: **CR**

Selections: **CR, LF, CR+LF**

Some printers cannot accept characters while they are printing. In some cases, the handshake is not well controlled by the printer, so a delay at end of line is helpful.

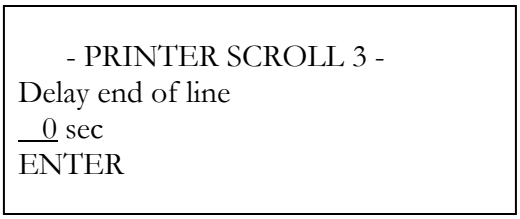

Password: Service

Default: **0 sec**

Min: **0 sec**

Max: **5 sec**

A form feed character can be sent to the printer after each report to force the printer to eject the paper. If NO is selected, a normal END OF LINE character(s) is printed at the end of the report.

Password: Service

Default: **NO**

Selections: **NO, YES**

2. Periodical Printing

   If you want to generate periodical printing, enter the number of minutes, hours or days in the following screen. By entering 0, the periodical printing is prevented. Use the INTV key to switch from minutes to hours and to days.

```
        - PRINTER SCROLL 5 -
Print Interval
_0 min
ENTER                INTV
```

Password: Operator

Default: **0 min**

Min: **0 min, 0 hour, 0 days**

Max: **59 min, 23 hour, 365 days**

The system can print at specific times during the day. Enter the time you want to obtain the printing. Use the NEXT key to scroll between the print times (maximum 4). The ON/OFF key enables or disables the displayed print time.

```
    - PRINTER SCROLL 6 -
Print time #1
time          HH;MM
ENTER         ON/OFF      NEXT
```

Password: Operator

	If 24 hours	If am/pm
Default:	**OFF**	**OFF**
Min:	**00:00**	**01:00**
Max:	**23:59**	**12:59**

3. Define Print Format

   By selecting YES in the following screen, the system is instructed to print one line each time a new alarm condition occurs. The alarm is printed as follows:

   xx-xx-xxxx yy:yyz

   kkkkkkkkkkkkkkkkkkkk

   where:

xx-xx-xxxx	**Day, Month, Year, printed according to the local format as defined in Main Menu 2, Display Scroll**
yy:yyz	**Hour, Minutes, am/pm printed according to the local format as defined in Main Menu 2, Display Scroll**
kkkkkkkkkkkkkkkkkkkk	**Alarm message, same message appearing on the screen.**

For Example:

10-10-1998 8:14a

Clock Fail

Default: **NO**

Selections: **YES, NO**

There are two ways for defining the printing format. The first two predefined formats, which are as follows:

DEFAULT 1

TOTALS REPORT

Date:	**10-10-1998**
Time:	**8-12a**
MASTER TOTAL	**0.00 Tons**
RESET TOTAL:	**0.00 Tons**
OPERATOR TOTAL	**0.00 Tons**
RATE:	**0.00 TPH**

DEFAULT 2

Date:	**10-10-1998**
Time:	**8:12a**
MASTER START TOTAL:	**0.00 Tons**
MASTER STOP TOTAL:	**0.00 Tons**
QUANTITY:	**0.00 Tons**

The format "DEFAULT 2" is preselected when the weights and measures choice is NTEP.

The third is to define your own format, using the printer setup screens listed below.

Select DEFAULT if you want the predefined format. Select USER DEFINED if you want to set up your own format.

```
    - PRINTER SCROLL 8 -
Total report format
> Default <
CHOICE       ENTER
```

Password: Service

Default: **DEFAULT 1 unless Weights and Measures option is selected, then DEFAULT 2.**

Selections: **DEFAULT 1, DEFAULT 2, USER DEFINED**

If your selection is USER DEFINED, the following screens are displayed.

Define if you want to add a heading string in your report. Up to three strings can be used to add the Customer name as well as other information that you want to include in the print format.

```
    - PRINTER SCROLL 9A -
Number of strings
 3
ENTER
```

Password: Operator

Default: **1**

Min: **0**

Max: **3**

If one string is selected, the following scroll is displayed. This first one allows the operator to define the string. Use the alphanumeric keypad, pressing the numeric key corresponding to the letter that you want to type. Every time you press a new key, the cursor moves to the right one place. If you need to use two times the same key (example

for double letters), move the cursor right using the arrow keys (left and right soft keys).

```
    - PRINTER SCROLL 9B -
Contents string #1                    Password: Operator
 xxxxxxxxxxxxxxx
<              ENTER          >
```

Default: **xxxxxxxxxxxxxxxxxxxxxxxxxxxx**

Once you have defined the string, specify where the string has to be placed on the printed report. The coordinate is given in the following way:

00000000001111111111222222222223...

01234567890123456789012345678 90...

+----------> Y

00|This line printed first

01|This line printed second ^

02| | DIRECTION OF

03| | PAPER

04|

05|

06|

. v

. X

Use the X-pos and Y-pos keys to enter the X and Y coordinates. Confirm with ENTER. By specifying 0,0, the string is not printed.

```
    - PRINTER SCROLL 9C -
String #1 pos.
X = _0__,       Y = _0__
ENTER                    X\Y-pos
```

Password: Operator

	X	Y
Default:	**1,**	**1**
Min:	**0,**	**1**
Max:	**24,**	**80**

If more strings were selected, the following scroll is displayed.

```
    - PRINTER SCROLL 9D -
Contents string #2
 xxxxxxxxxxxxxxxxxxxxxxxxx
<        ENTER        >
```

Password: Operator

Default: **xxxxxxxxxxxxxxxxxxxxx**

```
        - PRINTER SCROLL 9E -
String # 2 pos.
X = _0__        Y = _0__
ENTER                X\Y-pos
```

Password: Operator

	X	Y
Default:	**2,**	**1**
Min:	**0,**	**1**
Max:	**24,**	**80**

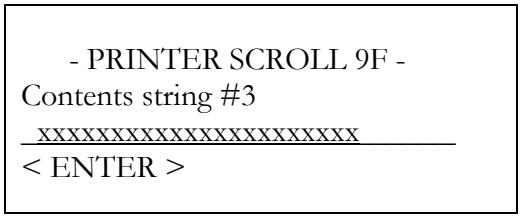

Password: Operator

Default: **xxxxxxxxxxxxxxxxxxxx**

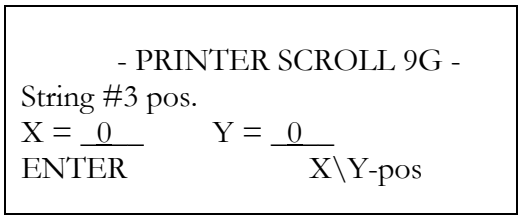

Password: Operator

	X	**Y**
Default:	**3,**	**1**
Min:	**0,**	**1**
Max:	**24,**	**80**

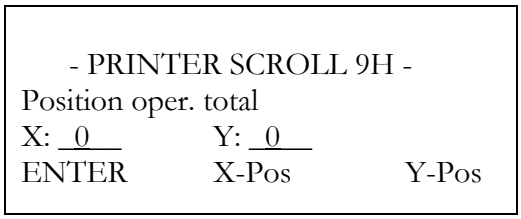

Password: Operator

	X	**Y**
Default:	**4**	**1**
Min:	**0**	**1**
Max:	**24**	**80**

In a similar way, you can position the following variables in the print format:

The Reset Total:

- PRINTER SCROLL 9I -	
Position reset total	Password: Operator
X: 0 Y: 0	
ENTER X-Pos Y-Pos	

	X	**Y**
Default:	**5**	**1**
Min:	**0**	**1**
Max:	**24**	**80**

The Master Total:

- PRINTER SCROLL 9J -	
Position mast. total	Password: Operator
X: 0 Y: 0	
ENTER X-Pos Y-Pos	

	X	**Y**
Default:	**6**	**1**
Min:	**0**	**1**
Max:	**24**	**80**

The Current Date:

```
        - PRINTER SCROLL 9K -
Position date                          Password: Operator
X = _0__      Y = _0__
ENTER         X-Pos        Y-Pos
```

	X	Y
Default:	**7,**	**1**
Min:	**0,**	**1**
Max:	**24,**	**80**

The Current Time:

```
        - PRINTER SCROLL 9L -
Position time                          Password: Operator
X = _0__      Y = _0__
ENTER         X-Pos        Y-Pos
```

	X	Y
Default:	**8,**	**1**
Min:	**0,**	**1**
Max:	**24,**	**80**

```
        - PRINTER SCROLL 9M -
Position rate                          Password: Operator
X = _0__      Y = _0__
ENTER         X-Pos        Y-Pos
```

	X	Y
Default:	**9,**	**1**
Min:	**0,**	**1**
Max:	**24,**	**80**

The Average Rate Since the Last Print:

The average rate is calculated only on the periods of time in which rate has been higher than 5% of capacity.

```
        - PRINTER SCROLL 9N -
Position avg. rate
X = _0_        Y = __0_
ENTER          X-Pos          Y-Pos
```

Password: Operator

	X	Y
Default:	**9,**	**1**
Min:	**0,**	**1**
Max:	**24,**	**80**

The Running Time Since the Last Print:

The running time is the time in which rate has been higher than 5%.

```
        - PRINTER SCROLL 9P -
Position running tm
X = __0_       Y = _0___
ENTER          X-Pos          Y-Pos
```

Password: Operator

	X	Y
Default:	**0,**	**1**
Min:	**0,**	**1**
Max:	**24,**	**80**

If the optional load out board is installed, the batch quantity and the batch total can also be printed.

The PRINT Key

If the optional COMM board is installed, the PRINT key enables the printer to print data.

The following screen is displayed:

```
    - PRINTER SCROLL -
COM #1 no data
Start print TOTALS
PRINT        RETURN     COM
```

Password: Not Required

The second line gives the status of the printer:

NO DATA **Indicates the printer is idle, no data are being sent to the printer.**

IS RUNNING **The system is sending data to the printer.**

The third line indicates what kind of data is printed if the PRINT key is pressed. The Up and Down keys select between:

TOTALS	**Print totals**
BATCH	**Only if load out option is active, print load out information**
SETUP	**Print the setup data of the instrument.**
TRAILS	**If audit trails option is active, print audit trails data.**

Print starts after the PRINT key is pressed.

The COM key allows the operator to select the printer in case more than one is installed.

Here are some examples of data that can be printed:

Print TOTALS:

TOTALS REPORT

DATE:	**10-10-1998**
TIME:	**8:12a**
MASTER TOTAL:	**0.00 Tons**
RESET TOTAL:	**0.00 Tons**
OPERATOR TOTAL:	**0.00 Tons**
RATE:	**0.00 Tph**

Print BATCH:

BATCH REPORT

DATE:	**10-10-1998**
TIME:	**8:12a**
BATCH NR	**0**

SET PT: **0:00 Tons**

TOTAL **0.00 Tons**

Print ALARM:

01-2210-10 **8: 14a**

Clock Fail

Print SETUP:

INSTRUMENT SETUP

The system prints out all data and setups.

Main Menu 6

Main Menu 6 is dedicated to Linearization.

```
        - MAIN MENU 6 -
Press MENU for more

        LINEAR
```

Linearization is not normally used with conveyor belt scales. In case of extreme instances where calibration at multiple flow rates may be required, please consult the factory.

Appendix D Loadout

If option is supplied, request REC 3910 from factory.

Appendix E MT2001 Multi-Point Calibration

This appendix contains setup and calibration menus for establishing multiple calibration factors, both zero and span, for the weighing system.

Variations in conveyor belt tension affect the accuracy capabilities of a conveyor belt scale. Causes of these variations may be the use of a reversing belt, multiple feed points, or multiple products being conveyed that have a significant difference in bulk density. In order to compensate for these changes in the system operation, and to maintain weighing accuracy under varying mechanical influences, different calibration factors may be used.

Up to 10 different calibration points are possible. Each calibration point will have its own zero number, span number, and linearization table. To configure the linearization table, refer to Appendix B (REC-3909). The different calibration points are accessible through the front panel keyboard or via a digital input. When a calibration number is selected, all of its associated values immediately become active.

Define Number of Calibration Points

During the initial programming (cold start) of the integrator a theoretical zero and span are computed and applied to all of the calibration points. From this point on, any zero or span calibration that is performed changes only the currently active calibration point.

Enabling multiple calibration points is performed through CAL DATA scroll. Press MENU, MENU, CALIB. DATA and scroll down until the following screen is displayed.

```
- CAL DATA SCROLL 14 -
Number of calib.
1
ENTER
```

Default: **1**

Min: **1**

Max: **10**

If number of calibrations selected is greater than 1, the scale symbol is added in the RUN display with the active calibration number, as indicated below.

123.0 Tons
0.0 Tph

Selection of Calibration Point

From 1 to 10 different calibrations can be programmed into the Micro-Tech 2001 Integrator. After selecting the number of calibrations as outlined in Define Number of Calibration Points, it is necessary to determine which calibration corresponds with a particular operating mode. The calibration number can be activated via the front panel keyboard or via a remote digital input.

Front Panel Keyboard

To change calibration number from the front panel keyboard, press the scale soft key. The following screen is displayed.

SELECT CALIBRATION
Calib. Number
1
ENTER

Enter the calibration number to be activated and press the ENTER soft key. Return to the main RUN MENU. The active calibration number will now be in the lower left hand portion of the screen. If an auto or manual zero or a manual or automatic span is performed at this time, only the active calibration number is affected.

NOTE. If digital inputs are assigned to select calibration numbers, the calibration number cannot be changed via the front panel keyboard. Attempting to do so results in the following screen being displayed.

```
Selection calib.
In remote mode.

RETURN
```

Digital Input Selection

When the number of calibrations selected is greater than 1, scrolls are added to the Digital Input Define (Dig,. input def.). Scroll in I/) DEF SCROLL 4 as indicated below:

```
- I/O DEF SCROLL 4 -
Dig. Input Def.
CAL. Sel 2 0 NC
ENTER        NC/NO        NEXT
```

The number of Cal Sel ____ inputs is equal to the number of calibration numbers. When an input is activated, the corresponding calibration number and associated zero, span, and linearization table is also activated. In the event that more than one input is activated, the first input active will be used.

When an auto zero or auto span is executed, the results are saved to the active calibration number. Once a calibration test has been initiated, changing the active calibration number via the digital inputs will have no effect; the calibration factors, zero, or span will be saved to the calibration number that was active at the beginning of the test.

Linearization

In the linearization scroll, the table of linearization factors displayed are only for the active calibration number.