MT 2000 Model 2104 Loss-in-Weight Feeder Controller

Installation & Operation Manual

REC-3946 Rev J P/N 050571

Revision History

Revision Number	Date Revised	ECO Number	Revision Specifics
Revision A	November 1996		
Revision B	January 1998		
Revision C	May 1998		
Revision D	December 1998		
Revision E	March 2001		
Revision F			
Revision G	September 2001		
Revision H	December 2011	2372	Update
Revision J	February 2014		Corrected operating temperature. Added operating current, ref UL recertification to 3rd edition.

Disclaimer

Though the information provided herein is believed to be accurate, be advised that the information contained herein is not a guarantee for satisfactory results. Specifically, this information is neither a warranty nor guarantee, expressed or implied, regarding performance, merchantability, fitness, or any other matter with respect to the products, and recommendation for use of the product/process information in conflict with any patent. Please note that *Thermo Fisher Scientific* reserves the right to change and/or improve the product design and specifications without notice

TABLE OF CONTENTS

LIST OF TABLES & FIGURES

Chapter 1 Introduction

General

This instruction manual contains information on the installation, operation, calibration, and maintenance of the Micro-Tech 2000 Model 2104 microprocessor-based, digital loss-in-weight feeder controller. The feeder controller is designed for application on loss-in-weight feeder scales with load cell measurement.

Application

The Model 2104 loss-in-weight feeder controller is a microprocessor based menu driven controller designed to control the feed rate of the following machines:

- Loss-in-weight feeders
- Increase weight feeders

The feeder controller can also be configured to control the following systems:

- Feed rate control with extraction from a silo
- Ratio control of different loss-in-weigh feeders
- Blending systems.

Main Features

The Model 2104 loss-in-weight feeder controller or panel mount has many hardware and software features necessary to control the machines described above. Other features are listed in specific sections of this manual.

- Menu driven scroll entries on a multiple line display.
- Five LED status indicators.
- Visible and electrical outputs representing load measurement, calculation of rate as load change per unit of time and integration of load differences to obtain totalized quantities.
- Automatic zero and span calibration.

- Several software options that can be turned on by keypad entry or by installing optional plug-in PC boards.
- Three process control modes: Conventional PID (Proportional, Integral, Derivative); PID + S (same as PID except it quickly reacts to a set point change); and PEIC (Periodical Error Integral Control).
- Two independent scale weighing systems and control loops.
- Dual channel analog output for control loop and rate (can be programmed for other use) and dual channel voltage inputs for remote set point, moisture compensation, or other use.
- Opto-coupled digital inputs and outputs.
- Alarms and failure detection.
- Communication standards: RS232C, RS485 networking and multidrop and 20mA current loop passive.
- Allen-Bradley Remote I/O
- PROFIBUS DP

Loss-In-Weight Feeder Controller Configuration

The standard configuration of the feeder controller includes one single channel A/D board, one dual channel current output, analog input board and one remote total pulse output module.
Five more circuit board expansion slots are available. The following boards can be inserted if the need arises.

- Dual channel A/D board
- Single channel current output board
- Dual channel current output board
- 16 digital outputs/4 digital inputs
- 4 digital outputs/16 digital inputs
- Serial communication board
- Allen-Bradley Remote I/O
- PROFIBUS-DP

Feeder Controller Description

The feeder controller has been designed for loss-in-weight feeders, and is capable of performing all the necessary measuring and control functions.

All the required functions are resident into the software of the microprocessor. Optional functions are automatically turned on when the relevant hardware is installed, or after the operator has selected them through keypad. In all cases, there is no need for special software to be created.

Even if the program of the Micro-Tech 2104 feeder controller is thus very large, the set

up of the instrument is very simple, since it is performed by entering parameters through keypad following the guidelines of comprehensive messages appearing on the four lines alphanumerical display.

The set up parameters can be divided into the following main groups:

- measuring
- automatic control
- monitoring
- printing
- communication

Measuring Functions

The feeder controller can be directly connected up to six 350 ohm load cells and convert the weight signal into a numeric value with very high accuracy and resolution (more than 2,000,000 counts at full scale).

Rate is calculated as decrement or increment of weight in time. Total is computed on three individual registers: total, reset total and operator total. It is calculated as difference of weight at given time intervals.

The unit can perform automatic zero and span calibrations.
Analog (current) output signals can be generated to transmit rate, net and gross weight to other control devices. Displayed variables and analog outputs can be smoothed via damping filters, individually programmable.

The system fully handles the refill of the bin, by acting in volumetric mode during the refilling time and adjusting the volumetric constants according to the current net weight.
One single instrument can control one or two completely independent loss in weight feeders.

Automatic Control Functions

The feeder controller provides two independent control loops, one for each loss in weight feeder. In both cases, the control loop can be either:

- PID = Proportional + Integral + Derivative
- PID + S = PID with cascade on set point
- PEIC = Periodical Error Integral Control

The process variable under control is the feed rate. The set point can be entered via keypad, or received through a serial communication channel, or an analog input.

Control output can be either current or pulses.

When the loss in weigh feeder is not running, the control output is locked in position or

forced to a preset value defined by the operator.

When the controllers are switched from Manual to Automatic and vice versa the integral term is adjusted so that the change does not generate jumps of the control outputs (bump-less).

The feeder controller can optionally operate the Load Out (Batch) software with full control of preset (high/low feed rate), pre-act, and start delay to compensate for distance on feeding points when operating several feeders in ratio.

For applications in blending systems, where more feeders need to operate with one set point source, but different ratios, the ratio between the main set point and each feeder can be entered through keypad, analog input or serial link.

Two weight thresholds (High and Low weight) are entered to define when the refilling has to start and to stop. The system will turn on the "Refill Output" when the Low level is reached, but will continue to operate in normal mode until the "Refill Input" is turned on. When this happens, the system will switch to volumetric mode, and continue to work while the bin is refilled. When the weight is over the High threshold, the "Refill Output" is turned off. The system will remain in volumetric mode until the "Refill input" turns off and a delay time has elapsed.

Monitoring Functions

The unit includes the internal diagnostic which will generate alarms in case of hardware failures or programming errors. The following process alarms are also provided:

- high control deviation
- alarms for high and low flow rate and weight

Alarms are visible on the display and can be acknowledged and reset through keypad, digital input or serial line. Alarms can be delayed to avoid intervention in case of short time peaks. Each individual alarm can be programmed to operate as alarm, shut down or to be ignored. Two LED's indicate the cumulative status of alarms and shut-down. Digital outputs are also provided for the following:

- Hardware failure;
- High control deviation;
- Alarm cumulative;
- Shut down cumulative.

Print Functions

Periodical and under command prints can be obtained by connecting a serial printer to an optional communication board. Time and date are permanently stored in memory and updated even in case of power loss. The entire set up of the instrument can also be printed out.

Functional Description

Measuring Functions

1. Flow Rate

In a loss of weight system the flow rate measurement is done by taking the difference between two subsequent weight measurements. The time between the two measurements has to be short enough to keep the response time of the system within an acceptable value.

As a consequence, the difference between the two weights is a very low value and it is strongly affected by any noise on the weight signal which may be produced by vibrations of the mechanical parts.

The accuracy and stability of the flow rate measurements improves under the following conditions:

- increase of the speed variation of the weight signal by reducing the hopper discharge time and increasing the ratio between net weight and load cell capacity
- reduction of the weight signal noise caused by mechanical vibrations by increasing the ruggedness of the mechanical structure supporting the weight hopper

To handle the above problems, the feeder controller provides various averaging and damping of the signals.

Each of the two weight values used to calculate the weight difference is the average of a number of weight measurements; this number is called "WEIGHT CONSTANT" (W) and is adjustable from 2 to 16.

The time within two subsequent weight measurements is also adjustable and is called "RATE INTERVAL" (T) (values adjustable from 0.1 to 6.0 seconds).

The product of W times T is called "RATE FACTOR" (F) and defines the difference in time within the two weight values used to calculate the weight difference.

However the program calculates and updates the flow rate value at each T time by using the values memorized on a number of memories equal to "W" shifted each one from the other of "T" time.

This means that after a step variation of actual flow rate the time required for the calculated flow rate to represent 100% of the variation is equal to F with linear change from old to new value. See Figure 1-1.

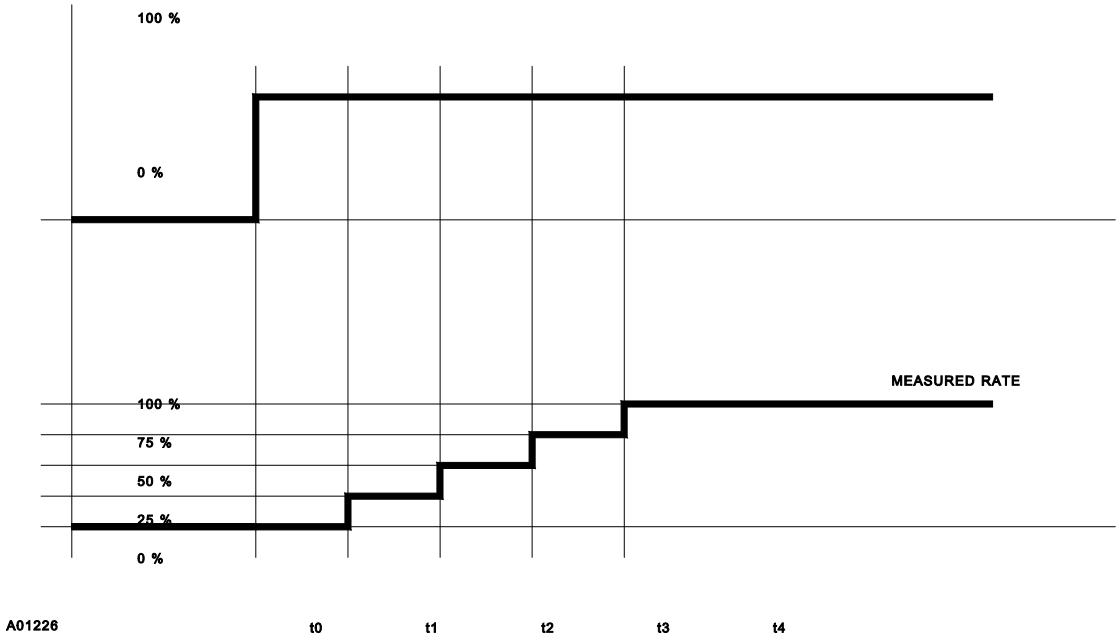

Figure 1-1. Loss of Weight Step Response

A damping action (asymptotic curve) can also be applied to the calculated flow rate value for additional filtering to compensate plant vibrations. On sizing a loss in weight system, extreme care should be taken to maintain the full scale flow within the acceptable limits to avoid running into unstable operating conditions.

The minimum acceptable flow rate is determined by the resolution of the A/D converter and by the sizing of the load cell with respect to the net weight. The A/D converter provides 262000 counts when the load is 100% on a 3.5 mV/V load cell. Using load cells with high output (3 mV/V) and maintaining the ratio between the net weight and the size of the load cells high, allows a better resolution in the rate reading. If, for example, a 2 mV/V load cell is used, and ratio between net and load cell capacity is 50%, the available number of A/D counts is reduced to 74857 (=262000*2/3.3*50/100). If the system has to work at a rate so low that it takes 2 hours to discharge the entire bin, the internal number representing the load will decrease at a rate of only 10 counts per second (=74857/(2*3600)). This means that the rate indication will be updated each 10 seconds if we want a resolution of 1%. To achieve this, we will enter values of W and T so that F (=T*W) is at least equal to 10. The system will still work, but the indication of rate will react slowly.

The maximum rate is limited by the ratio between the discharge time and the refill time. Since the system works in volumetric mode during the refilling period, the system should be designed so that the ratio between the refilling

time and the working time does not exceed 1%.

In addition, discharge times larger than 3 hours have to be considered critical, because the effect of little vibrations would become appreciable to an extent that may compromise the functionality of the system.

Also, the quality of the feeding machine must be taken in consideration. Low rates mean very small amounts of material to be moved, so the feeding machine must be able to modulate the flow of material in the smoothest way, avoiding forming blocks of material or temporary absence of it. For more system design information, see Appendix A.

2. Totalization

During normal operation the totalization is performed by taking the difference between the initial weight of the material in the bin and the actual weight; thus the totalization has the same accuracy of a static weighing.

During the silo refilling, the totalization is performed by integrating the set point (which is supposed to be equal to the flow rate as this one cannot be calculated); thus during the hopper refilling the totalization may be affected by additional errors.

The additional errors introduced into the totalization by the refilling period depend on the ratio between the refilling time and the discharge (or charge) time. The higher this ratio is, the higher the error is.

The totalization takes place each second by memorizing the difference between the actual and reference weight. Then, the actual weight is memorized to be used as reference weight for the subsequent totalization operation.

In case of very low flow rates and plant vibrations, the result of a single totalization operation may be negative (due to the vibrations); in this case the data is not considered and the reference weight is kept unchanged.

At the end of the refilling of the silo, the program memorizes the new weight value as reference for the totalization.

3. Zero and Span Automatic Calibrations

The zero and span calibrations are normally performed by the instrument on the basis of the data entered through the keypad.

The instrument compares the value measured during the calibration test with the theoretical one (zero for zero calibration; calibration constant for span

calibration) and recalculates the instrument parameters necessary to obtain a measurement perfectly equal to the theoretical value.

4. Hopper Refilling

Start refill set and End refill set are used to start and end refilling of the hopper. The percent (%) of Max Scale Capacity for these settings are entered with the keypad. When the hopper weight drops below the Start refill set percentage, the REFILL output closes to start the refilling machine (feeder, conveyer, etc.). Using the REFILL input function is optional. If the REFILL input from the refilling machine is not used/assigned in the Integrator, control will go to stand-by mode and lock the screw speed to its last value (volumetric feed) when the REFILL output closes. If the REFILL input is assigned in the Integrator and is connected/wired, it must be activated so control will go to stand-by and feed will be volumetric. The REFILL input must be activated by a refilling machine closed contact or by wiring back the REFILL output to the REFILL input. The Volumetric feed rate will be changed by set point changes if the PID+S control action has been enabled.

When the max level value is reached, the REFILL output will shut off, to stop the refilling device.

The volumetric feed ends when either the REFILL output shuts off or the REFILL input de-activates depending on system set up. A stabilization time End refill time then begins. At the finish of End refill time, normal control action starts.

If the refilling does not end within an adjustable time, Refill time-out, an alarm occurs.

5. Density Compensation

In some applications it may happen that an appreciable difference in density exists between empty and full bin. In normal conditions, the control output is locked to its value at start of refilling and rate is supposed to remain unchanged until the end. However, if density will increase during refilling, real rate will be appreciably higher at end of refilling, and the system will take some time to acquire the new rate, and some additional time to properly set the control output. The system reduces this effect by acting in one of the following ways:

SET CONTROL OUTPUT

The control output, at end of refilling, is set to a pre-defined value:

$$ControlOut = SetControlOut$$

CORRECT CONTROL OUT

The control out, at end of refilling, is set to a pre-defined value:

$$ControlOut = ControlOut + ControlOut * \frac{Correction}{100}$$

RECORDING DENSITY VARIATION

In this case, the system will record, during the gravimetric phase, the relationship between the weight and the control output. During the following phase of refill, the control out will be set according to the recorded values, with reference to the increasing weight. This method also increases the accuracy of totalization during the refill phase. The number of recorded coefficients is 20.

$$ControlOut = ControlOut * Coeff(i)$$

Where "I" is selected between 1 and 20 according to the current load status.

6. Current Output Signals

The feeder controller has two current output signals (0-20/4-20 mA), upgradable to three or four by adding one board. The choice of the signal type is made through the keypad. Each current output may be programmed by keypad to deliver one of the following signals:

- flow rate
- control signal
- net and gross weight

Each output has its own adjustable damping and programmable delay.

Automatic Control Functions

1. Automatic Control of Instantaneous Value

The feeder controller maintains the process variable equal to the set point by varying the control output signal.

The process variable is rate. The set point may be entered through the keypad (local set) or, as an external signal (remote set) which may be an analog or serial signal.

When the feeder is not running and the controller is on automatic, the control output may correspond to one of the following conditions selected through the keypad:

- locked on the last value before the stop
- locked on a value from 0-100% as entered through the keypad

When the feeder starts, the feeder controller begins the control action from the value at which the output was locked when the feeder stopped.

Auto/manual switching is of bump-less type.

2. PID Control Action

There are three main control actions (Proportional + Integral + Derivative).

The control action is given by the following formula:

$$OUT = kp*E + ki* \int E\, dt + \frac{d}{dt} E$$

where:

OUT = output control signal
Kp = proportional band
Ki = integration constant
Kd = derivative constant
E = control deviation (set point minus process variable)

The three constants Kp, Ki and Kd are entered through the keypad by entering zero the corresponding control action is not performed.

3. PID + S Control Action

If this control action is selected, the control output will be changed proportionally to the set point variations.

This control action gives a greater response time to set point variations, but may only be used for those applications where the volumetric flow is linear with the control output (star feeder, screw feeders, variable speed conveyor, etc.).

Also, the flow rate is volumetrically updated as a function of the set point during the refilling period.

$$OUT = 0.5 * \frac{SETPOINT}{MAXSETPOINT}$$

4. P.E.I.C. Control

Where a dead time exists between the regulation point and the measuring point, this control action is particularly useful. The control action is made by periodical adjustments of the control signal followed by a waiting time correspondent to the process dead time. During the waiting time, the output signal remains constant. At the end of the waiting time, the output signal changes for a time equal to the "Integral Time". The total variation of the output signal within the two seconds is proportional to the deviation between set point and controlled variable. By reducing the proportional band and/or increasing the integral time, the control signal variation increases for the same deviation.

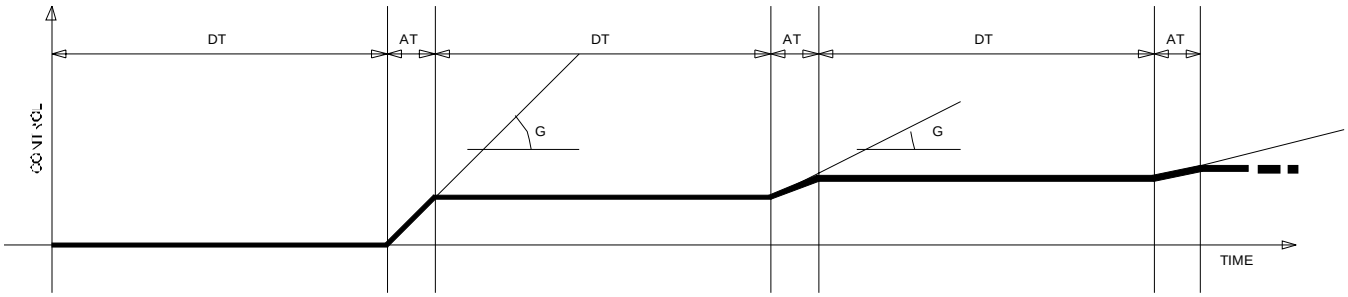

DT = DELAY TIME (TRANSPORT TIME)
AT = ACTIVE TIME = INTEGRAL TIME
G = GAIN

A01048

Figure 1-2. Control Signal Variation

5. Analog Delay

In control systems where several feeders operate in ratio, the transport time from each feeder to the mixing point can be different.

To insure the correct ratio at the mixing point, an analog delay can be programmed on the remote set point signal and or on the analog output. This delay provides a time shift of the variations of the variable.

The delay is performed using a table with 50 positions. The resolution (in seconds) is related to the preset time, i.e.:

Delay Time [s]	Resolution [s]
up to 25	0.5
from 26 to 50	1
from 51 to 100	2
from 101 to 250	5
from 251 to 500	10

6. PEIC Increase Decrease Controls

The control can either be an analog output or "increase/decrease" digital outputs (in this case the control is proportional).

The activation time of the output is given by the following formula:

$$act_{time} = PEIC_{time} * \frac{e[\%]}{Prop_{band[\%]}}$$

If the error is positive (process variable > set point) the "decrease" output is activated. If negative, the "increase" output is activated.

If the PEIC time is defined, PEIC increase/decrease digital outputs become active.

7. Automatic Manual

The feeder controller can have two possible states:

AUTOMATIC — The feeder controller's automatic control performs as described above in step 1.

MANUAL — The value of the control output is set manually by the operator by using the keypad.

Automatic or Manual mode is selected using the AUTO/MAN key. The change between the two states is bump-less.

8. Batch Control

The feeder controller, while performing the automatic control of the flow rate, may also perform the batch control.

In this case, the feeder will operate under flow rate control, and stop when the required quantity (quantity set) is reached. A preset value may be entered to switch to a lower feed rate. When the totalized value equals the value of the quantity set minus preset, the controller will switch to a lower rate set point (low rate set) thus reducing the flow rate for a fine batching end. The unit also allows the pre-act correction (or compensation of material before the scale) whose value has to be entered manually.

The feeder is stopped when the totalized value equals the batch set value minus the overflow correction value.

The batch START/STOP commands are provided by external signals (manual push-button or relay contact from automatic system). The batch stop signal is used only as emergency to abort the batch cycle before its end. A delay time is provided between start command and actual start to compensate the difference in transport distance to the mixing point when several weigh feeders are installed.

Monitoring Functions

The feeder controller is supplied with an alarm and indication system. Indication can be in the form of:

- status indications
- process alarms
- programming errors
- equipment failures

If any of the controlled conditions takes place, it is signaled by the lighting of a LED on the front and by a digital output.
Through the keypad it is possible to call, on the display, all the existing alarms and acknowledge them.

1. Status Indications

- Controller on automatic: The "AUTO" LED is lighted.
- Controller in remote set point: The "REMOTE" LED is lighted, Set point source is set to Analog in or Serial in and the controller is in automatic mode. A digital output can be assigned to indicate to external equipments that the controller can be remotely controlled.
- Controller ready: The “READY” LED is lighted. A digital output can be used to indicate this to external equipments. The following conditions are true:

  FEEDER IS CALIBRATED
  NO FAILURE ALARM
  NO SHUT DOWN CONDITION
  NO CALIBRATION MODE

2. Process Alarms

The following process conditions are monitored and may produce alarms or shut down according to keypad selection. A delay time before the abnormal condition is monitored may be set for each individual alarm.

- High control deviation (above or below set point)
- High flow rate
- Low flow rate
- High weight
- Low weight
- High positive deviation of control loop 1
- High high positive deviation of control loop 1
- High negative deviation of control loop 1
- High high negative deviation of control loop 1
- High positive deviation of control loop 2
- High high positive deviation of control loop 2
- High negative deviation of control loop 2
- High high negative deviation of control loop 2

Each abnormal condition may be set as:

- NONE: Neither alarm nor shut down.
- ALARM: Warning, the feeder continues to run.
- SHUT DOWN: The feeder stops.

3. Programming Errors

Errors may occur only during programming or calibration as a consequence of entering data above or below the operating range of the feeder controller. If data above or below the limits are entered, the system will display a warning message and the minimum/maximum limits will be shown.

4. Equipment Failures

The feeder controller has an internal diagnostic system which detects the following instrument failures:

- Clock Calendar circuit failure
- Load cell failure
- RAM failure
- ROM failure
- Power on
- Default constants installed at power on

- Power down during calibration
- Calibration time expired
- General purpose external alarms
- Overflow of totalizer
- Auto Zero tracking limit
- Load Out deviation
- Communication error
- BCD error
- Mathematical error

Unpacking and Inspection

The Micro-Tech™ 2104 Feeder Controller has been properly packaged for shipment and storage, when necessary. Refer to the appropriate manual in the Appendix for unpacking procedures for optional equipment.

Inspect all packages for damage before opening as the carrier may be responsible for shipping damage. Refer to the appropriate manual in the Appendix for inspection procedures for optional equipment.

Storage

The Micro-Tech™ 2104 Feeder Controller can be safely stored, with cover latches secured and hole plugs installed, between -40º to +158º F (-40º to +70º C). The units should be protected against moisture.

Symbols

Symbol	Description
	Alternating current
	Earth (ground) TERMINAL
	PROTECTIVE CONDUCTOR TERMINAL
	Caution, risk of electric shock
	Caution (refer to accompanying documents)

Table 1-1. Symbol Identification

Hardware Specifications

Enclosure

1. Field

   - NEMA 4X, dust and watertight
   - Size 15 x 13 x 7 inches
   - Fiberglass reinforced polyester molded blue
   - Door window UVA acrylic UL#E64358
   - Stainless steel "Quick" type latch
   - 2 position mounting feet
   - Steel chassis providing EMI/RFI shielding
   - Provision for 7 solid-state input/output modules (4 output, 3 input)
   - Power on/off switch (field terminal board option)

2. Panel mount

   - Size: DIN43700 96 X 288 mm
   - Enlarged bezel for field mount and U.S. panel mount to allow "dust seal"
   - Material: chromated mild steel

Environmental Conditions

1. Indoor/outdoor. Should be mounted as close to the load cells as possible without being exposed to excessive heat, or moisture.

2. Altitude up to 6,561 feet (2000 M)

3. Temperature:
   Storage: -40º to +158º F (-40º to +70º C)
   Operating: +14º to +122º F (-10º to +50º C)

4. Maximum relative humidity 80% for temperature up to 31 degree C decreasing linearly to 50% humidity at 40 degree C.

5. Pollution degree (Pollution Degree 2)

Power Requirements

1. Nominal voltage: 110/120/220/240 VAC, selectable

2. Nominal frequency: 50/60 Hz

3. Operating range: Nominal voltage +10%, -15%
   93.5 VAC - 121 VAC (110 VAC Nom.)

102.0 VAC - 132 VAC (120 VAC Nom.)
187.0 VAC - 242 VAC (220 VAC Nom.)
204.0 VAC - 264 VAC (240 VAC Nom.)

4. Fusing: L1 side of line
   1.0 Amp Slo-Blo 110/120 VAC, Type T
   0.50 Amp Slo-Blo 220/240 VAC, Type T

5. Operating Current: .50 / .45 / .25 / .23 Amps

6. Maximum non-destructive input voltage: 150/300 VAC for 1 minute

7. Power Switch: Field mount: switches both L1 and L2.

8. Transient overvoltage according to installation category (Overvoltage Category II)

AC Power Supply

- EMI/RFI protection
- 110/120/220/240 VAC input selection by means of TWO switches (UL, CSA, VDE approved) mounted internally.
- 50/60 Hz transformer

DC Power Supply

1. Auxiliary Power Supply Output (Alarm Contacts, etc.)

   - Output voltage: +24 VDC +27/-21%
     (19.0/30.4) (unregulated)
   - Isolation: Yes 500 volts
   - Output ripple: 1.0 V peak to peak typical
   - Output current: 600 mA maximum.
   - Short-circuit protection

Load Cell (Weight)

1. Load cell input circuits

   - Number: Up to SIX 350 ohm load cells in parallel. Cable distance 200 ft. or less.
   - Sensitivity: 0.5 mV/V to 3.5 mV/V (keyboard selectable).
   - Input impedance: 1 M ohm minimum.
   - Maximum usable signal: 114% of 3 mV/V.
   - Isolation: Non-isolated.
   - Maximum non destructive input voltage:
     ±6 V relative to ground.
   - Transient/RFI protection: NO
   - Load cell cable shield: Connected to earth ground.

2. Load Cell Excitation Power Supply

- 10 VDC ± 10%, 220 mA
- Minimum load impedance (operating) 58 ohms
- Output short circuit, 1.5 A maximum

3. Excitation sense circuitry

- 6 Wire System. Cable distance over 200 ft. (not to exceed 3000 ft.).
- Nominal input voltage: ±5 Vdc (10 volts)
- Input impedance: 100 k ohm minimum.
- Jumper selectable: Local or remote sense.

Mother Board Digital Inputs

The field mount integrator has provision on the field terminal board for three OPTO 22/Generation 4 modules. The programmable status inputs may be AC or DC (see Figures 1-5 or 1-6).

The panel mount integrator version only accepts a dry contact input. See Appendix C for specifications and a typical wiring diagram.

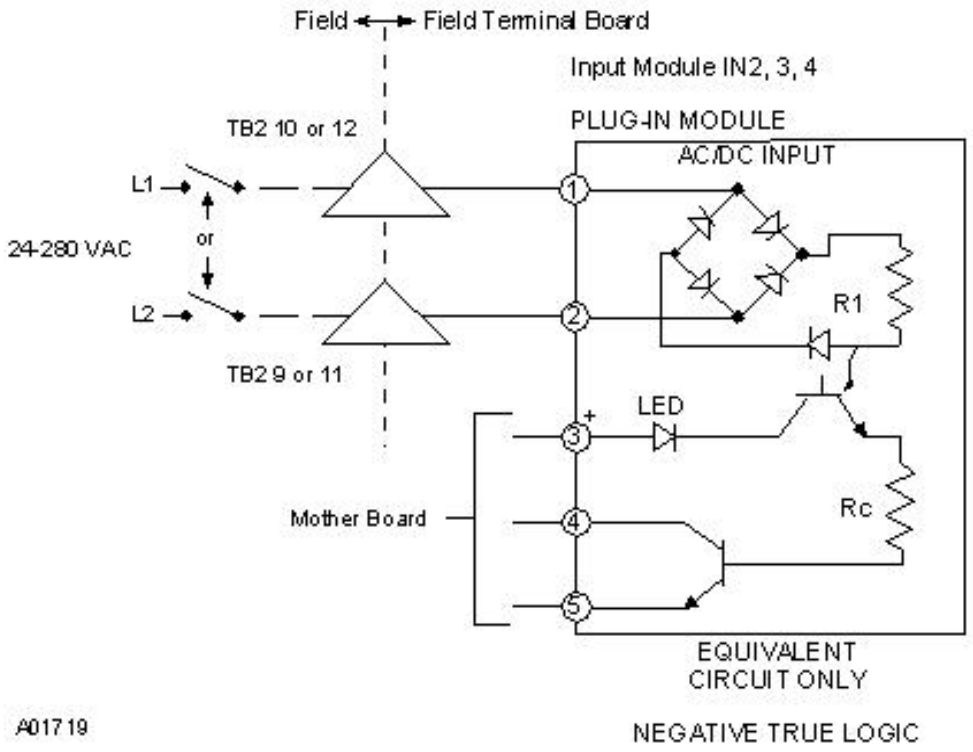

Figure 1-5. AC Input Module

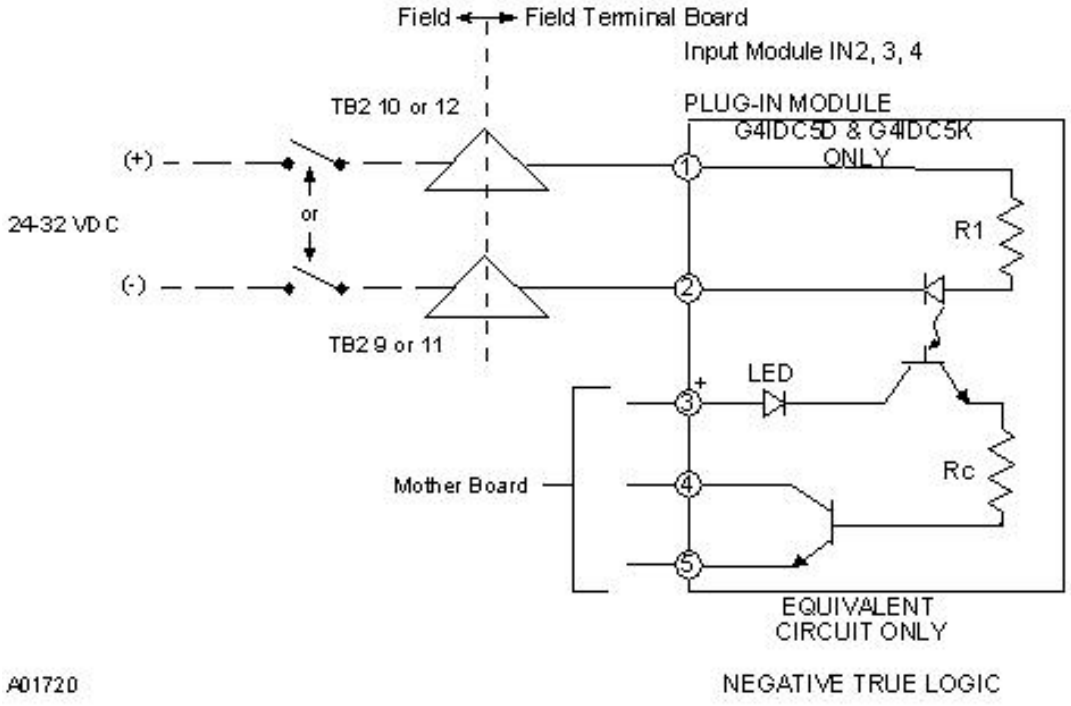

Figure 1-6. DC Input Module

Mother Board Digital Outputs and Fault Output

The field mount integrator has provision on the field terminal board for four OPTO 22/Generation 4 modules. Three are programmable and one is a dedicated fail safe fault output. All outputs may be AC or DC (see Figures 1-7 or 1-8).

The panel mount integrator version outputs are 24 VDC open collector. See Appendix C for specifications and a typical wiring diagram.

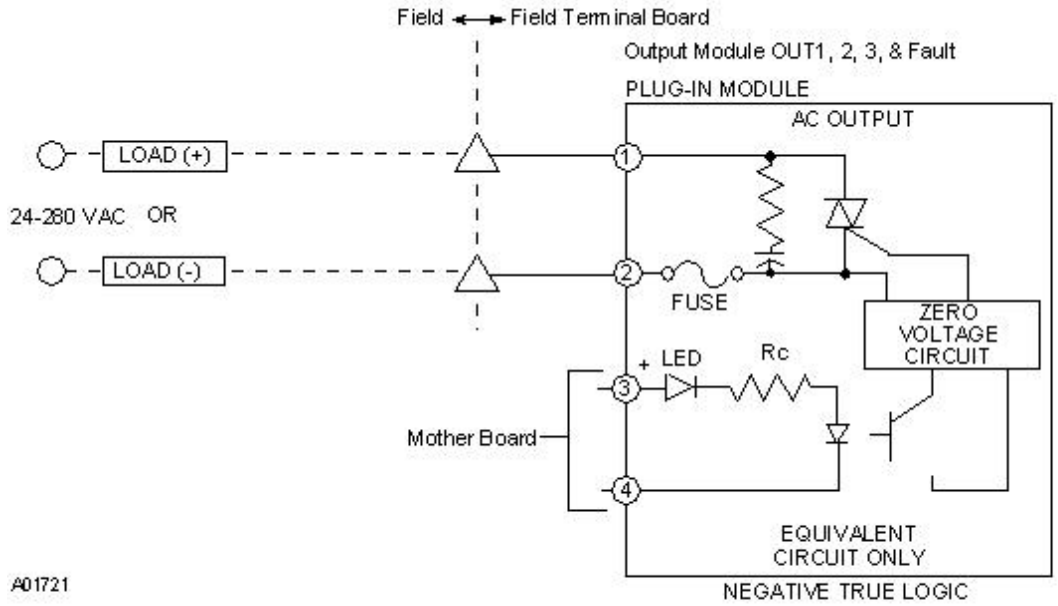

Figure 1-7. AC Output Module

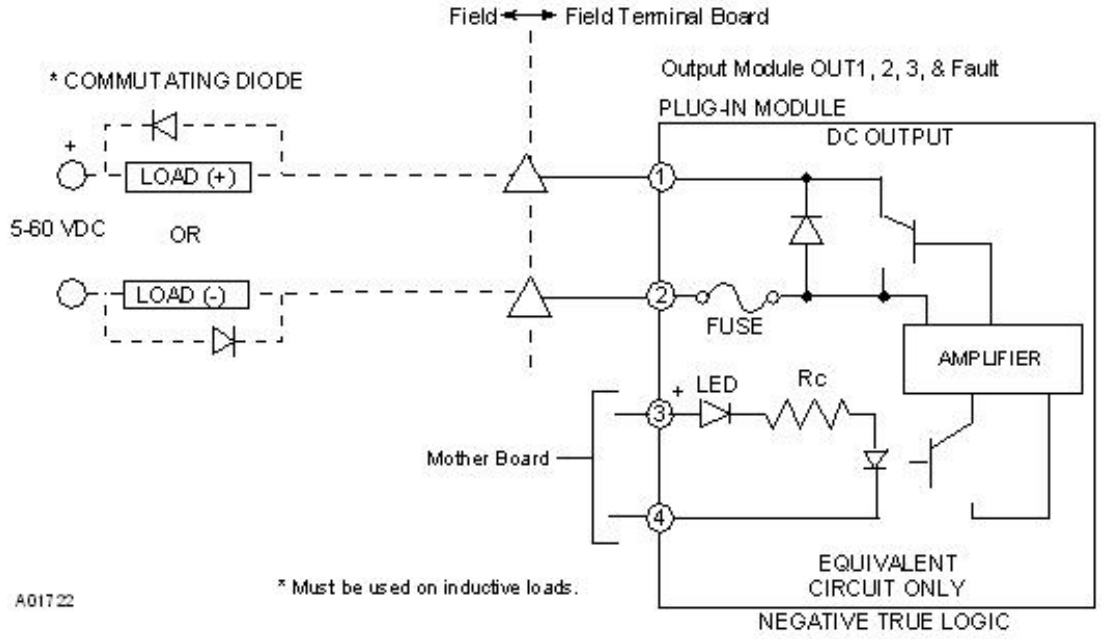

Figure 1-8. DC Output Module

Analog I/O Board B

1. (2) high level inputs (Figure 1-9)

- Type: Differential voltage input.
  (0-20 mA or 4-20 mA with external resistor)
- Range: 0-5 volt, or ±5 volt, programmable.
- Input impedance: 1 M ohm nominal (differential)
- Maximum usable input voltage: 106% of full-scale
- Non-isolated.
- Maximum non-destructive input voltage: 12 V peak

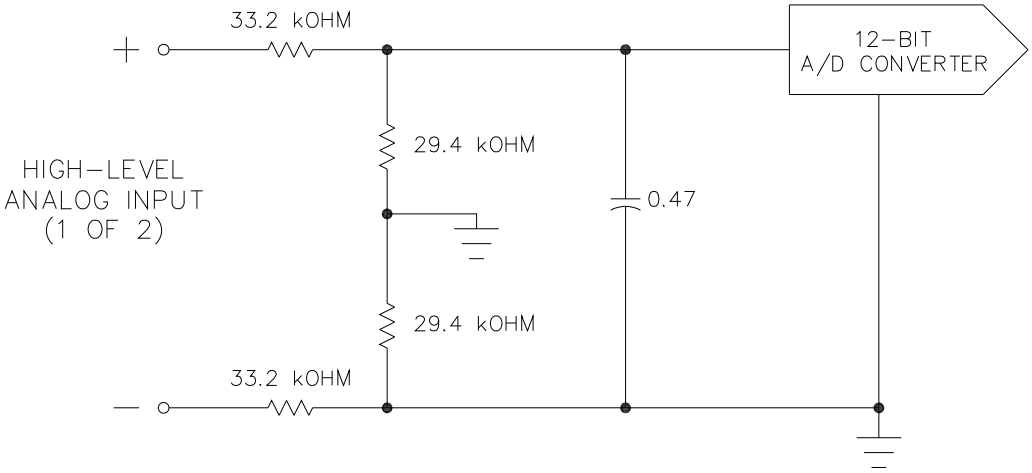

Figure 1-9. High-Level Analog Input

2. (2) current outputs (Figure 1-10)

- Optically isolated
- Isolated power source
- Voltage output by adding an internal dropping resistor.
- Output range: User selectable 0-20 mA or 4-20 mA, representing 0 to 100% variable.
- Resistive load: 800 ohms maximum
- Capacitive load: no limit

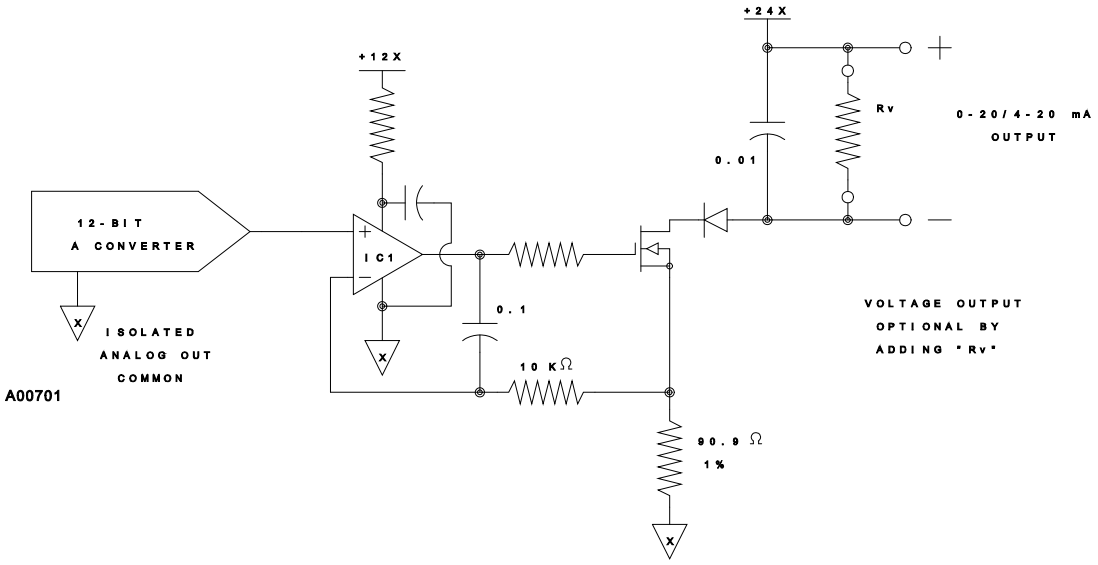

Figure 1-10. High-Level Analog Output

Analog I/O Board A (Optional)

Depopulated version of Analog I/O board B:

1. (1) current output (Figure 1-10)

- Output range: User selectable 0-20 mA or 4-20 mA, representing 0 to 100% variable.
- Resistive load: 800 ohm maximum loop
- Capacitive load: no limit

Communication Board A

(See Field Wiring Diagram.)

1. Serial Interface

   - Type: Conforms to RS-232C, RS-485/422, and 20 mA standards; supports 2 and 4 wire multi-drop in RS-485. 20 mA loop is passive ONLY.
   - Selection: One interface mode only
   - Interfacing: RS-485 supports 2-wire or 4-wire multi-drop networking; RS-232C provides support for modem.
   - Data rate: 300 to 19200, operator selectable from the keyboard.
   - Data format: Asynchronous, bit-serial, selectable parity, data length, and stop bits.
   - Optical isolation, 250 Vrms max.
   - Input voltage: ±30 VDC max. (RS-232C), +15/-10 VDC max. (RS-485)
   - Cable length: 50 feet maximum (RS-232C), 4000 feet maximum (RS-485 and 20 mA)

2. Clock Calendar

   - Type: Dallas DS1285 with battery backup; provisions of clock/calendar with integrated battery.

3. Refer to Serial Communications manual (REC 3951) if this option is installed.

Allen-Bradley Remote I/O

Refer to Allen-Bradley Remote I/O manual (REC 4014) if this option is installed.

PROFIBUS-DP

Refer to PROFIBUS DP manual (REC 4065) if this option is installed.

2

Chapter 2 Installation

General

This chapter describes the Loss-In-Weight Feeder Controller installation procedure, hardware configuration, and initial programming. Initial programming is a machine directed procedure prompting the operator to enter required conveyor and belt scale parameters. After all parameters have been entered, the feeder controller performs an unassisted zero and span calibration.

Field Mount Installation

The field mount feeder controller should be mounted in a control room environment and not be exposed to excessive vibration, heat or moisture. The feeder controller may be mounted up to 4,000 feet from the scale.

Mounting

Mount the feeder controller to a rigid, flat, vertical surface using four mounting holes provided on the back of the enclosure (Figure 2-1).

Care should be taken to insure the mounting surface is flat so as not to twist or warp the fiberglass enclosure when tightening the mounting bolts.

Safety Precautions

CAUTION. DO NOT INSTALL, OPERATE, OR PERFORM ANY MAINTENANCE PROCEDURES UNTIL YOU HAVE READ THE SAFETY PRECAUTIONS WHICH FOLLOW.

1. Do not connect power to the electronics, nor turn on the unit until you have read and understood this entire manual. The precautions and procedures presented in this manual must be followed carefully in order to prevent equipment damage and protect the operator from possible injury.

2. CAUTION. Hands and clothing must be kept away from all moving or rotating parts.

3. WARNING. Covers over the electronics should always remain in place during operation. They should be removed only for maintenance procedures with the machine's power OFF. Be sure to replace all covers before resuming operation.

4. WARNING. All switches (such as control or power) must be OFF when checking input AC electrical connections, removing or inserting printed circuit boards, or attaching voltmeters to the system.

5. Incoming voltages must be checked with a voltmeter before being connected to the electronics.

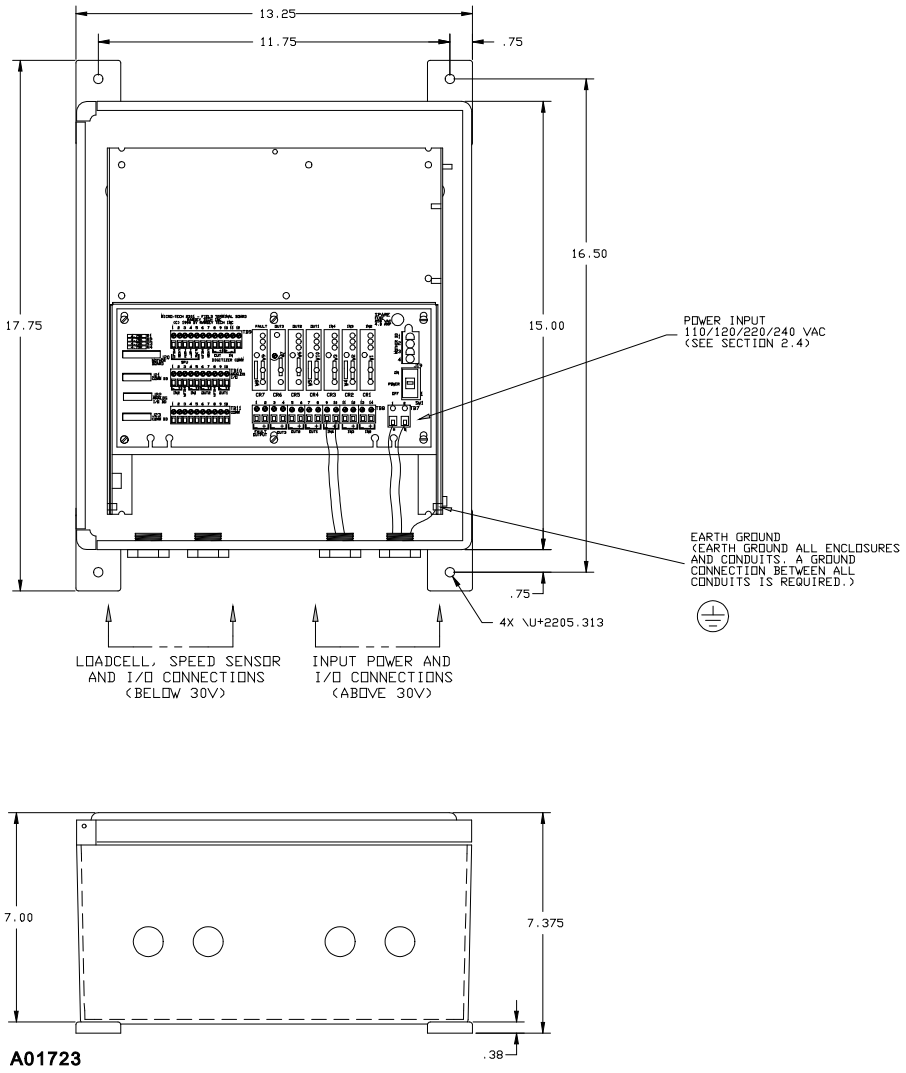

Figure 2-1. Electrical and Mounting Guidelines MT2000 Model 2104 (Field Mount) Feeder Controller

6. WARNING. Extreme caution must be used in testing in, on, or around the electronics, PC boards, or modules. There are voltages in excess of 115 V or 230 V in these areas. Avoid high voltage and static electricity around the printed circuit boards.

7. Maintenance procedures should be performed only by qualified service personnel and in accordance with procedures/instructions given in this manual.

8. During maintenance, a safety tag (not supplied by Thermo Fisher Scientific) should be displayed in the ON/OFF switch areas as a precaution instructing others not to operate the unit.

9. Only qualified service technicians should be allowed to open and work in the electronics, power supply, control, or switch boxes.

10. Objects should never be placed or stored on the feeder controller.

11. This equipment should not be operated, nor utilized in applications other than those stated in the original order. (To adapt production rates or applications, consult Thermo Fisher Scientific products Customer Service for recommendations.)

12. All panels covering the electronics must be in place and tight before wash down procedures. Damage to the electronics could result from water, moisture, or contamination in the electronics housing.

OSHA – Occupational Safety and Health Act

The Occupational Safety and Health Act clearly places the burden of compliance on the user of the equipment and the act is generalized to the extent that determination of compliance is a judgment decision on the part of the local inspection. Hence, Thermo Fisher Scientific will not be responsible for meeting the full requirements of OSHA in respect to the equipment supplied or for any penalty assessed for failure to meet the requirements, in respect to the equipment supplied, of the Occupational Safety and Health Act, as interpreted by an authorized inspector. Thermo Fisher Scientific will use their best efforts to remedy such violation at a reasonable cost to the buyer.

Utility Connections (Incoming Power)

CAUTION

DO NOT CONNECT POWER UNTIL YOU HAVE READ AND UNDERSTOOD THIS ENTIRE SECTION. IMPROPER CONNECTION MAY RESULT IN DAMAGE TO YOUR FEEDER CONTROLLER.

CAUTION

VERIFY THAT THE INPUT VOLTAGE IS CORRECT WITH AN AC VOLTMETER BEFORE YOU CONNECT IT TO THE FEEDER CONTROLLER.

CAUTION

EARTH GROUND MUST BE PROVIDED TO THE FEEDER CONTROLLER. DO NOT USE CONDUIT TO PROVIDE THIS GROUND.

CAUTION

A READILY ACCESSIBLE DISCONNECT DEVICE SHALL BE INCORPORATED IN THE FIXED WIRING.

CAUTION

REFER TO THE FIELD WIRING DIAGRAM (FIGURES 2-2 AND 2-3) AS A GUIDE IF YOU DO NOT HAVE A SPECIFIC WIRING DIAGRAM FOR YOUR SYSTEM. FOLLOW YOUR LOCAL ELECTRICAL CODES AND REGULATIONS FOR MINIMUM WIRE SIZE AND ROUTING.

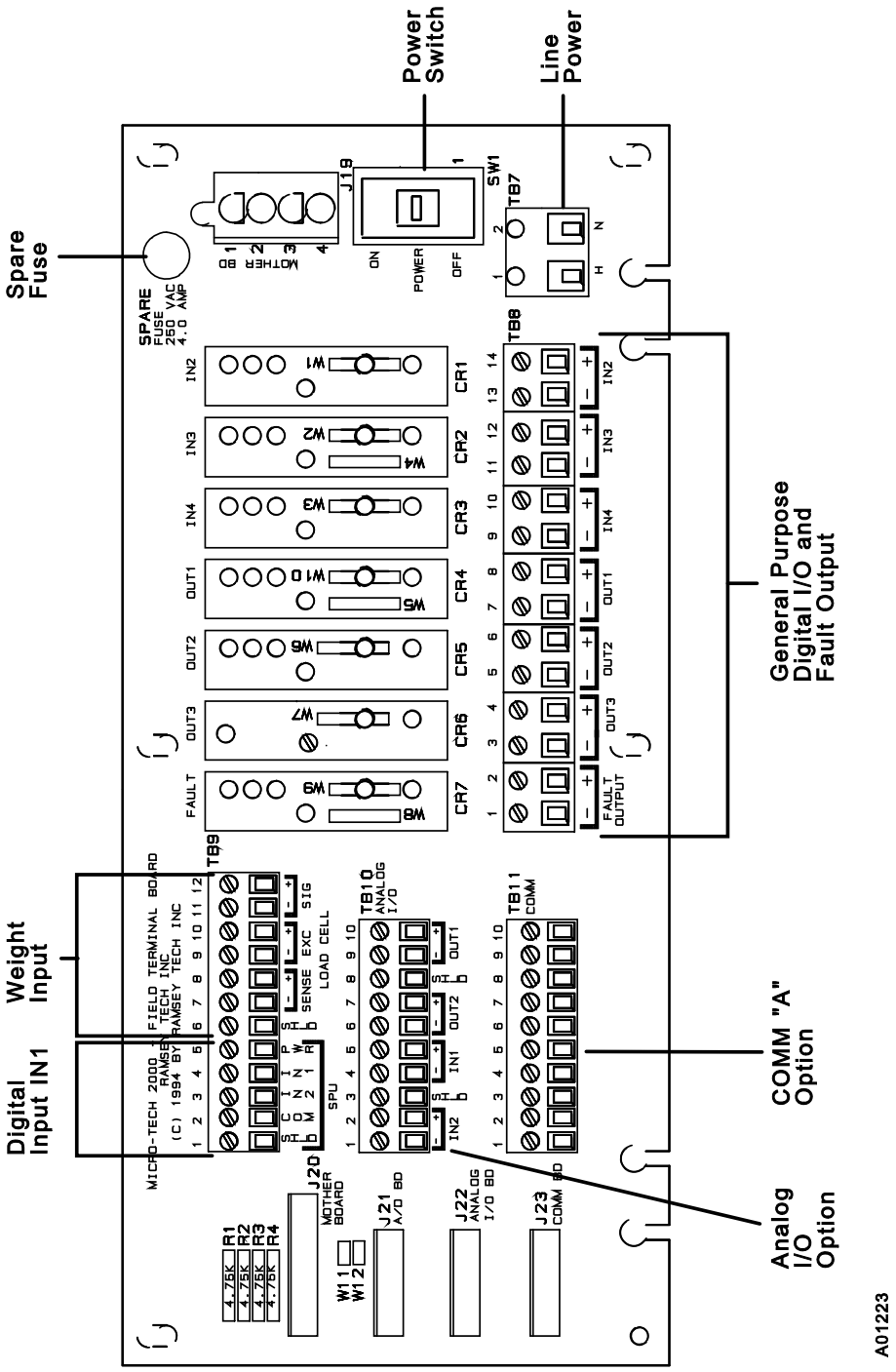

Figure 2-2. Field Terminal Board

Wiring

1. Critical wiring conditions:

   A. Insure power is off.
   B. Do not route load cell and signal cables in the same conduit with power cables or any large source of electrical noise.
   C. Earth ground all enclosures and conduits. A ground connection between all conduits is required.
   D. Wiring should be long enough to allow the field terminal entry panel to swing down for circuit board access.
   E. Connect the shields ONLY where shown.
   F. Check that all wires are tight in their connections.
   G. Never use a "megger" to check the wiring.
   H. A readily accessible disconnect device (maximum 20 amps) shall be incorporated in the field wiring. This disconnect should be in easy reach of the operator and it must be marked as the disconnecting device for the equipment.
   I. All conduits should enter the bottom of the enclosure. Do not run conduit through the top or sides of the enclosure.

2. To connect incoming power, use the following procedure (refer to Figure 2-1).

   (ALL UNITS SHIPPED FROM THE FACTORY ARE CONFIGURED FOR 120 VAC. IF ANOTHER INPUT SELECTION IS DESIRED, REFER TO SECTION DETERMINING INSTALLATION PARAMETERS.)

   A. Rotate the screw latch mounted on the lower left corner of the front chassis counterclockwise. Open the door.
   B. Route incoming power wiring through a conduit hole at the bottom right of the enclosure. Leave enough loose wiring so that if the field terminal board is moved, there will be enough length. Typically 8 inches is sufficient.
   C. Wire safety ground terminal located on the side of the chassis.
   D. Wire HOT to H on TB7.
   E. Wire NEUTRAL to N on TB7.
   F. If additional I/O is required operation at line voltages, these wires should be routed through a conduit hole on the bottom right of the enclosure. Leave enough loose wiring so that if the field terminal board is moved, there will be enough length. Typically 8 inches is sufficient.
   G. All additional field wiring operations at voltages less than 30 V must be located on the left bottom of the enclosure. Leave enough loose wiring so that if the field terminal board is moved, there will be enough length. Typically 8 inches is sufficient.
   H. Close front chassis cover and rotate screw lock on lower left corner counterclockwise until locked. Verify door is locked.

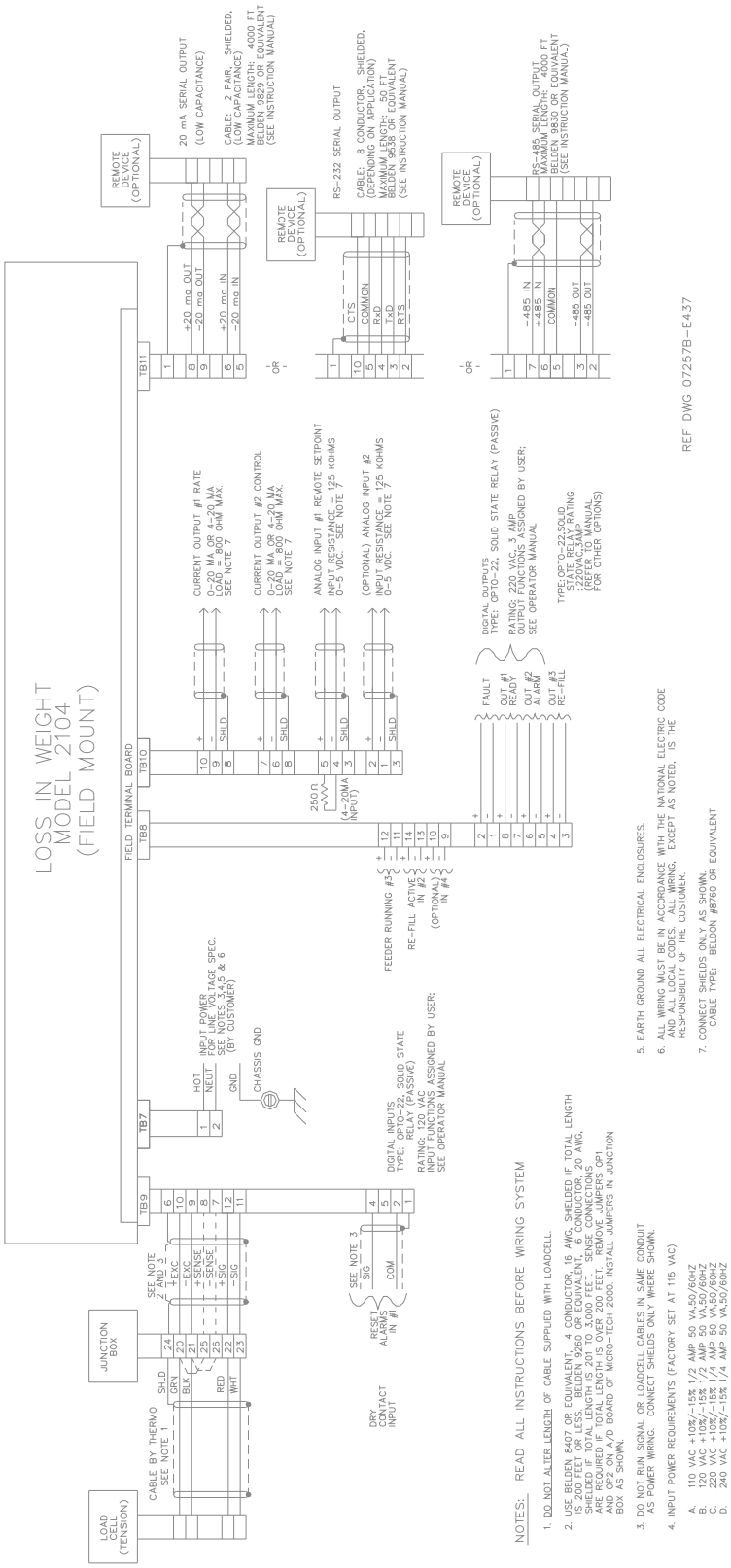

Figure 2-3. Field Wiring Diagram – Field Mount with Terminal Board

Panel Mount Installation

The panel mounted feeder controller is suitable for mounting in a control panel. The control panel should not be exposed to excessive heat, moisture or vibration. The front bezel, when properly seated, forms a dust seal.

A two (2) inch clearance around the top and bottom of the feeder controller is required for convection cooling. Additional clearances may be required if equipment mounted directly below generate excessive heat. Clearance in the back is necessary for wiring access and fuse replacement. Clearance on the side is necessary for inserting the chassis holding brackets from the back after insertion of the feeder controller.

Mounting

Provide a cutout in the panel and insert the feeder controller after removing the holding brackets (see Figures 2-4 and 2-5). From the back, insert the holding brackets on both sides of the feeder controller. Tighten the holding brackets to support the feeder controller and form the dust seal.

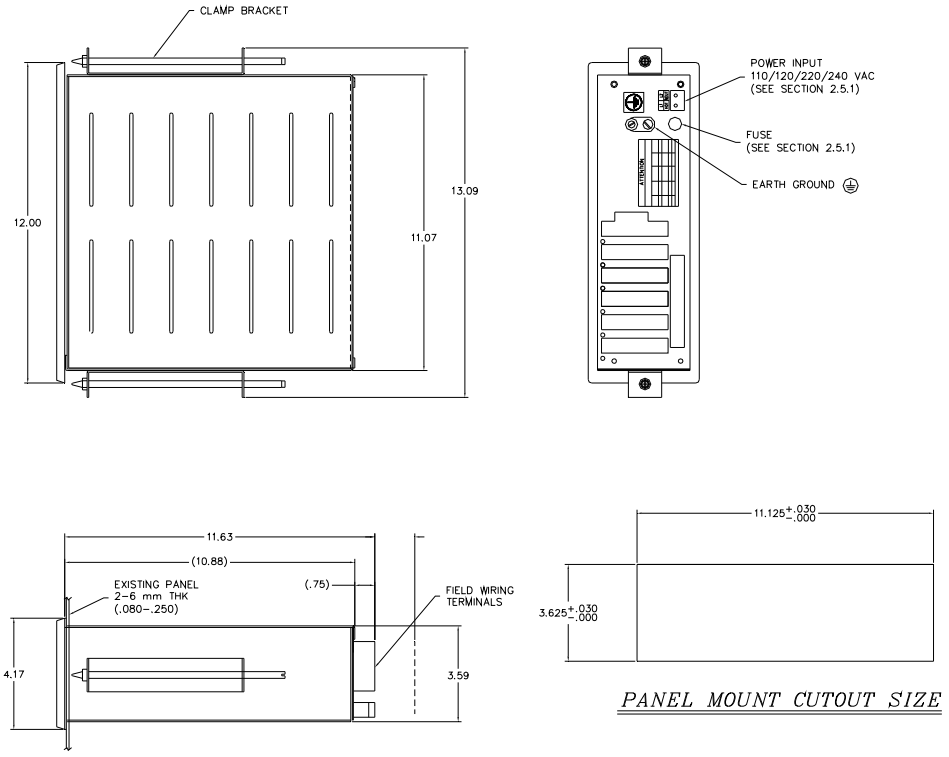

Figure 2-4. Electrical and Mounting Guidelines MT 2000 Model 2104 (Panel Mount) Feeder Controller

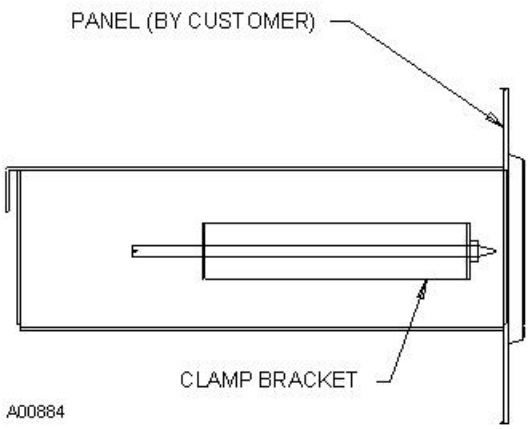

Figure 2-5. Installation MT 2000 Model 2104 (Panel Mount) Feeder Controller

NOTES:

1. See Figure 2-4 for panel cutout and outline and mounting dimensions.
2. The large rubber band shipped with the unit can be used to hold clamp brackets in place during installation.
3. Remove clamp brackets and slide chassis assembly through front of cut out. Re-install clamp brackets into chassis and tighten threaded rods against back of panel until unit is secure.

Safety Precautions

CAUTION

DO NOT INSTALL, OPERATE, OR PERFORM ANY MAINTENANCE PROCEDURES UNTIL YOU HAVE READ THE SAFETY PRECAUTIONS WHICH FOLLOW.

Do not connect power to the electronics, nor turn on the unit until you have read and understood this entire manual. The precautions and procedures presented in this manual must be followed carefully in order to prevent equipment damage and protect the operator from possible injury.

CAUTION

Hands and clothing must be kept away from all moving or rotating parts.

WARNING

Covers over the electronics should always remain in place during operation. They should be removed only for maintenance procedures with the machine's power OFF. Be sure to replace all covers before resuming operation.

WARNING

All switches (such as control or power) must be OFF when checking input AC electrical connections, removing or inserting printed circuit boards, or attaching voltmeters to the system.

Incoming voltages must be checked with a voltmeter before being connected to the electronics.

WARNING

Extreme caution must be used in testing in, on, or around the electronics, PC boards, or modules. There are voltages in excess of 115 V or 230 V in these areas. Avoid high voltage and static electricity around the printed circuit boards.

Maintenance procedures should be performed only by qualified service personnel and in accordance with procedures/instructions given in this manual.

During maintenance, a safety tag (not supplied by Thermo Fisher Scientific) should be displayed in the ON/OFF switch areas as a precaution instructing others not to operate the unit.

Only qualified service technicians should be allowed to open and work in the electronics, power supply, control, or switch boxes.

Objects should never be placed or stored on the feeder controller.

This equipment should not be operated, or utilized in applications other than those stated in the original order. (To adapt production rates or applications, consult Thermo Fisher Scientific products Customer Service for recommendations.)

All panels covering the electronics must be in place and tight before wash down procedures. Damage to the electronics could result from water, moisture, or contamination in the electronics housing.

OSHA – Occupational Safety and Health Act

The Occupational Safety and Health Act clearly places the burden of compliance on the user of the equipment and the act is generalized to the extent that determination of compliance is a judgment decision on the part of the local inspection. Hence, Thermo Fisher Scientific will not be responsible for meeting the full requirements of OSHA in respect to the equipment supplied or for any penalty assessed for failure to meet the requirements, in respect to the equipment supplied, of the Occupational Safety and Health Act, as interpreted by an authorized inspector. Thermo Fisher Scientific will use their best efforts to remedy such violation at a reasonable cost to the buyer.

Utility Connections (Incoming Power)

CAUTION

DO NOT CONNECT POWER UNTIL YOU HAVE READ AND UNDERSTOOD THIS ENTIRE SECTION. IMPROPER CONNECTION MAY RESULT IN DAMAGE TO YOUR FEEDER CONTROLLER.

CAUTION

VERIFY THAT THE INPUT VOLTAGE IS CORRECT WITH AN AC VOLTMETER BEFORE YOU CONNECT IT TO THE FEEDER CONTROLLER.

CAUTION

EARTH GROUND MUST BE PROVIDED TO THE FEEDER CONTROLLER. DO NOT USE CONDUIT TO PROVIDE THIS GROUND.

CAUTION

A READILY ACCESSIBLE DISCONNECT DEVICE (MAXIMUM 20 AMPS) SHALL BE INCORPORATED IN THE FIELD WIRING. THIS DISCONNECT DEVICE SHOULD BE IN EASY REACH OF THE OPERATOR AND IT MUST BE MARKED AS THE DISCONNECTING DEVICE FOR THE EQUIPMENT.

CAUTION

REFER TO THE FIELD WIRING DIAGRAM (FIGURE 2-6) AS A GUIDE IF YOU DO NOT HAVE A SPECIFIC WIRING DIAGRAM FOR YOUR SYSTEM. FOLLOW YOUR LOCAL ELECTRICAL CODES AND REGULATIONS FOR MINIMUM WIRE SIZE AND ROUTING.

Wiring

1. Some critical wiring considerations:

   A. Insure power is off.
   B. Do not route load cell and signal cables in the same conduit with power cables or any large source of electrical noise.
   C. Wiring should be long enough, and routed to allow the chassis to be removed from the front for servicing if necessary.
   D. Connect the shields ONLY where shown.
   E. Check that all wires are tight in their connections.
   F. Earth ground all enclosures and conduit.
   G. Never use a "megger" to check the wiring.
   H. A readily accessible disconnect device (maximum 20 amps) shall be incorporated in the field wiring. This disconnect should be in easy reach of the operator and it must be marked as the disconnecting device for the equipment.

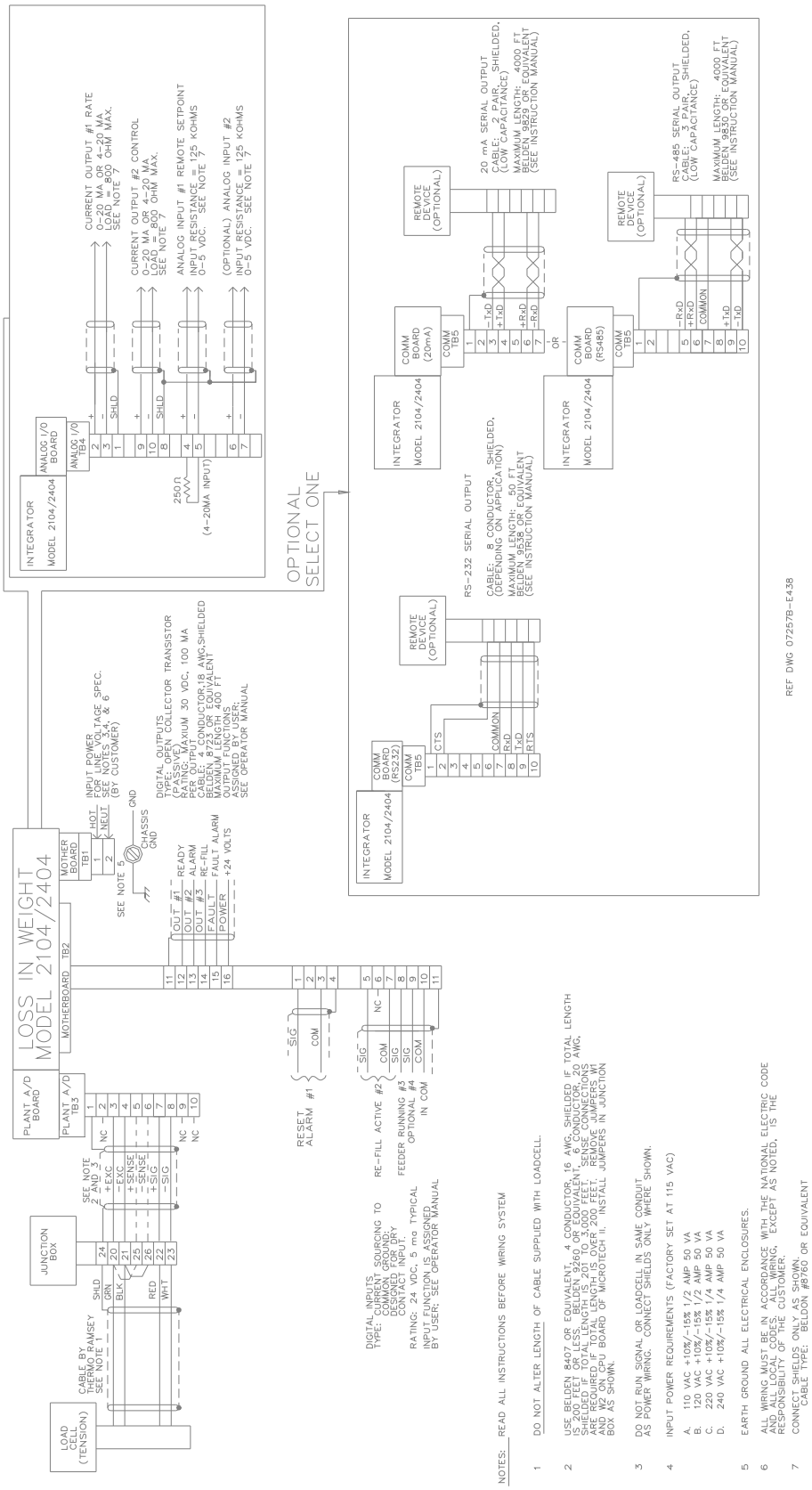

NOTES: READ ALL INSTRUCTIONS BEFORE WIRING SYSTEM

1. DO NOT ALTER LENGTH OF CABLE SUPPLIED WITH LOADCELL.
2. USE BELDEN 8407 OR EQUIVALENT, 4 CONDUCTOR, 16 AWG, SHIELDED IF TOTAL LENGTH IS 200 FEET OR LESS. BELDEN 9260 OR EQUIVALENT, 6 CONDUCTOR, 20 AWG, SHIELDED IF TOTAL LENGTH IS 200 TO 2000 FEET. SPLICE CONNECTIONS ARE REQUIRED IF TOTAL LENGTH IS OVER 200 FEET. REMOVE JUMPERS W1 AND W2 ON CPU BOARD OF MICROTECH II. INSTALL JUMPERS IN JUNCTION BOX AS SHOWN.
3. DO NOT RUN SIGNAL OR LOADCELL IN SAME CONDUIT AS POWER WIRING. CONNECT SHIELDS ONLY WHERE SHOWN.
4. INPUT POWER REQUIREMENTS (FACTORY SET AT 115 VAC)
   - A. 110 VAC +10%/-15% 1/2 AMP 50 VA
   - B. 120 VAC +10%/-15% 1/2 AMP 50 VA
   - C. 220 VAC +10%/-15% 1/4 AMP 50 VA
   - D. 240 VAC +10%/-15% 1/4 AMP 50 VA
5. EARTH GROUND ALL ELECTRICAL ENCLOSURES.
6. ALL WIRING MUST BE IN ACCORDANCE WITH THE NATIONAL ELECTRIC CODE AND ALL LOCAL OR STATE CODES, EXCEPT AS NOTED, IS THE RESPONSIBILITY OF THE CUSTOMER.
7. CONNECT SHIELDS ONLY AS SHOWN.
   CABLE TYPE: BELDON #8760 OR EQUIVALENT

Figure 2-6. Field Wiring Diagram Panel Mount

Feeder Controller Configuration

The Micro Tech 2104 is one of a family of products that is supported by a common hardware platform. Configuration of the hardware platform and additional circuit boards enable the hardware platform to be used for several discrete instruments.

Wire jumpers are installed at the factory for the instrument ordered, and should not have to be reconfigured in the field.

Switches and removable jumpers are described in this section. The default position is noted in each description and, in most cases, is not changed.

Configuration Jumpers and Switches

CAUTION

1. AC voltage input power selection SW1 and SW2 are located on the right center section of the mother board (see Figure 2-7).

	AC INPUT VOLTAGE	FUSE F1 (SB)	SW1 SETTING	SW2 SETTING
Default	110	0.5 A	110	110/220
	120	0.5 A	110	120/240
	220	0.25 A	220	110/220
	240	0.25 A	220	120/240

First, set SW1 for nominal 110 VAC or 220 VAC. Next, set SW2 close to the actual input voltage.

Example: Input Voltage = 117 VAC
SW1 = 110
SW2 = 120/240

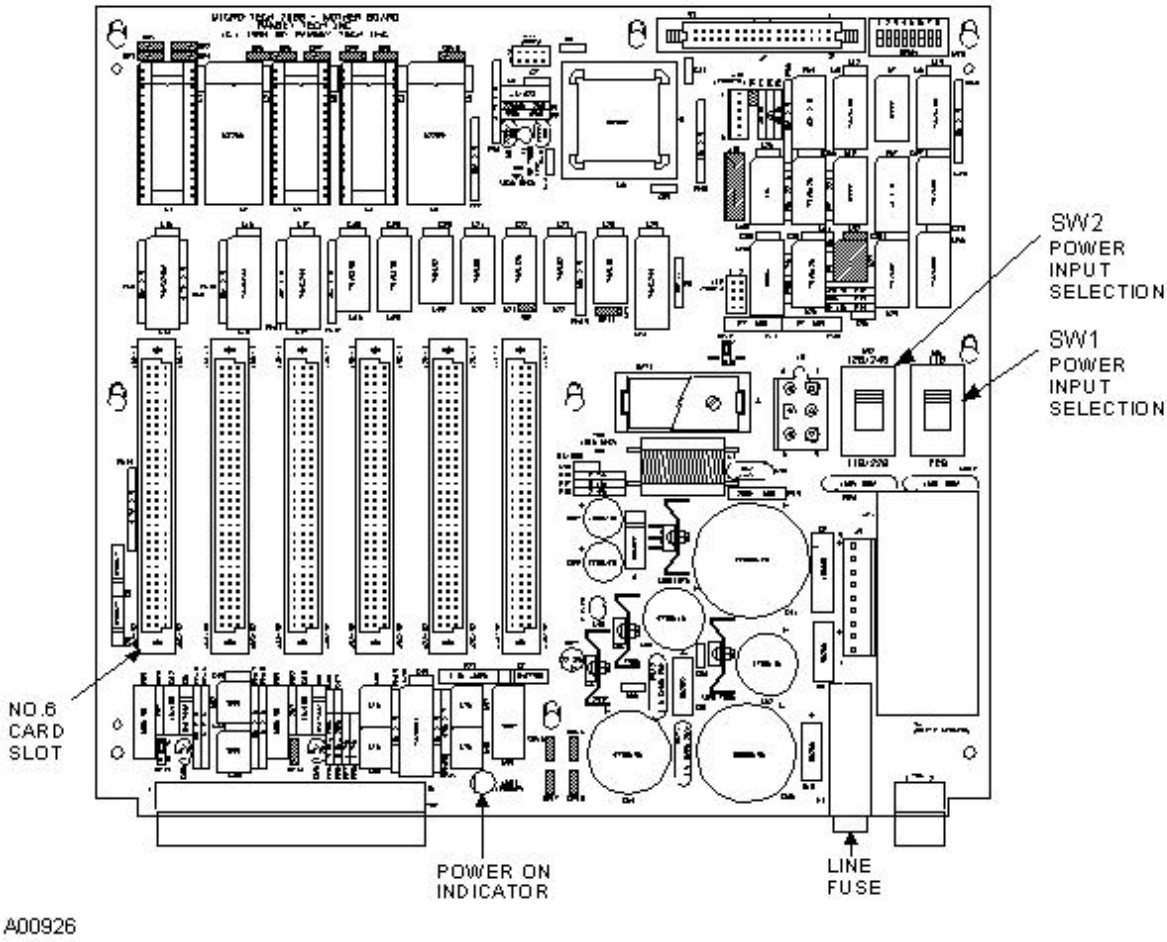

Figure 2-7. Model 2104 Mother Board

2. General Purpose Digital Inputs

Located on the Field Terminal board are provisions for three status input optional OPTO-22 plug-in modules. The programmable inputs may be configured as normally open or normally closed. External AC or DC power for input logic is required.

The user definable input choices are:

External alarm 1
External alarm 2
External alarm 3
Print
Print S1
Print S2
Reset Alarms
Reset tot
Reset tot S1
Reset tot S2
Refill

Refill S1
Refill S2
Loc/Rem Control
Loc/Rem Control S1
Loc/Rem Control S2
Auto/Man Control
Auto/Man Control S1
Auto/Man Control S2
Running
Running S1
Running S2
Regulation interlock

Any three inputs may be selected. An optional AC or DC OPTO-22 module is required for each input. Additional inputs can be selected by adding additional DIO board. See Appendix B.

3. Digital Outputs

Located on the Field Terminal board are provisions for four programmable output optional OPTO-22 plug-in modules. Three digital outputs are programmable and the fourth one is permanently assigned as integrator fault. The three programmable digital outputs may be configured as normally open or normally closed. The fault output is normally closed and cannot be reconfigured or used as a programmable output. External AC or DC power is required for all external devices wired to the output modules. One OPTO-22 AC output module is included for remote totalization.

The programmable output choices are:

Alarm Cumulative
Shutdown Cumulative
Ready
Refill
Refill S1
Refill S2
High Weight
High Weight S1
High Weight S2
Low Weight
Low Weight S1
Low Weight S2
High Rate
High Rate S1
High Rate S2
Low Rate

Low Rate S1
Low Rate S2
H Dev Pos
H Dev Pos S1
H Dev Pos S2
H Dev Neg
H Dev Neg S1
H Dev Neg S2
Loc/Rem
Loc/Rem S1
Loc/Rem S2
Auto/Man
Auto/Man S1
Auto/Man S2
Increase
Increase S1
Increase S2
Decrease
Decrease S1
Decrease S2
Totalizer
Totalizer S1
Totalizer S2

Any three (3) outputs may be selected. Additional outputs can be selected by adding additional DIO boards. See Appendix B.

4. Field Terminal Board (Field Mount Only)

The field terminal board is not available on the panel mount version. An optional solid state module rack is required to interface with the panel mount version when solid state modules are required.

NOTE. You must choose between wiring dry contact inputs and open collector outputs direct or through the solid-state relay module options. The two options cannot be mixed.

A/D Board Jumpers

1. Load Cell Sense

Load cell sense is controlled by selectable jumpers OP1 and OP2 located on the lower left corner of the A/D board (Figure 2-8). The jumpers should be in position "A" local sense if the distance is less than 200 feet between load cell and feeder controller.

For distances greater than 200 feet and less than 3,000 feet, the jumper should be in position "B". A special 6 wire cable is required. Refer to the field wiring drawing for jumper requirement in the scale junction box.

JUMPERS			
Mode	OP1	OP2	
Less than 200 feet	"A"	"A"	[Default]
Greater than 200 feet	"B"	"B"	

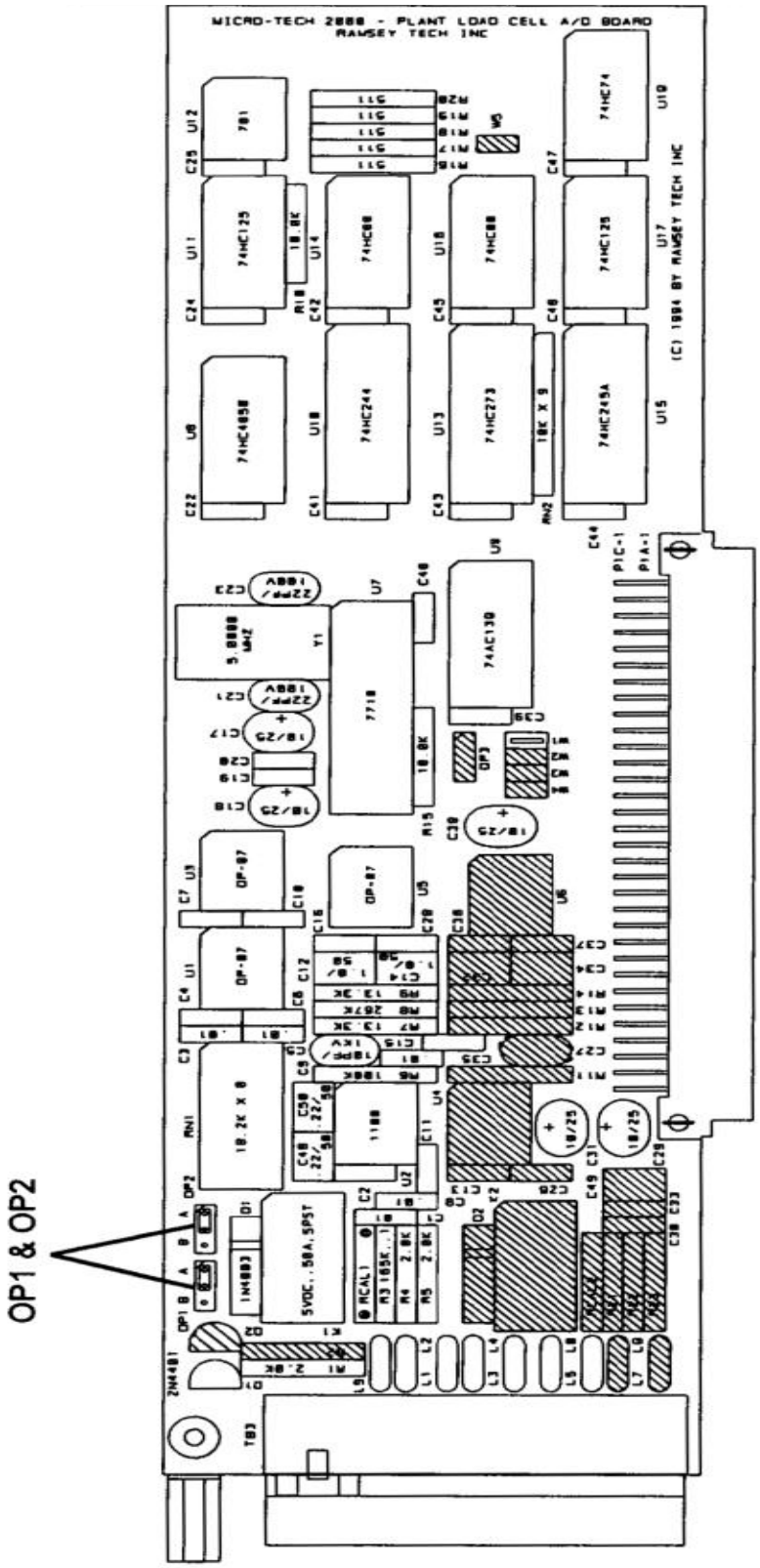

Figure 2-8. Load Cell Single Channel A/D Board

Analog Input/Output

The optional analog input/output board is available in two configurations described below: (A) has one current output only; whereas, (B) has two voltage inputs and two current outputs (Figure 2-9).

No configuration switches or jumpers exist on the analog boards.

The feeder controller is supplied with a type (B) two in/two out analog board located in Mother Board Slot #5. The feeder controller can support up to four current outputs. Four outputs require two (B) analog boards. An additional optional type (A) or type (B) can be added at any time.

No configuration or jumpers exist on the analog board.

A. One user definable 0-20/4-20 or 20-4/20-0 mA output.

Weight
Rate, or
Control

B. Two ± 5 VDC differential inputs and two user definable 0-20/4-20 or 20-4/20-0 mA outputs.

Inputs
None
Set point
Moisture Compensation

Outputs
None
Weight
Rate, or
Control

The feeder controller can support up to four current outputs. Four outputs require two (B) analog boards.

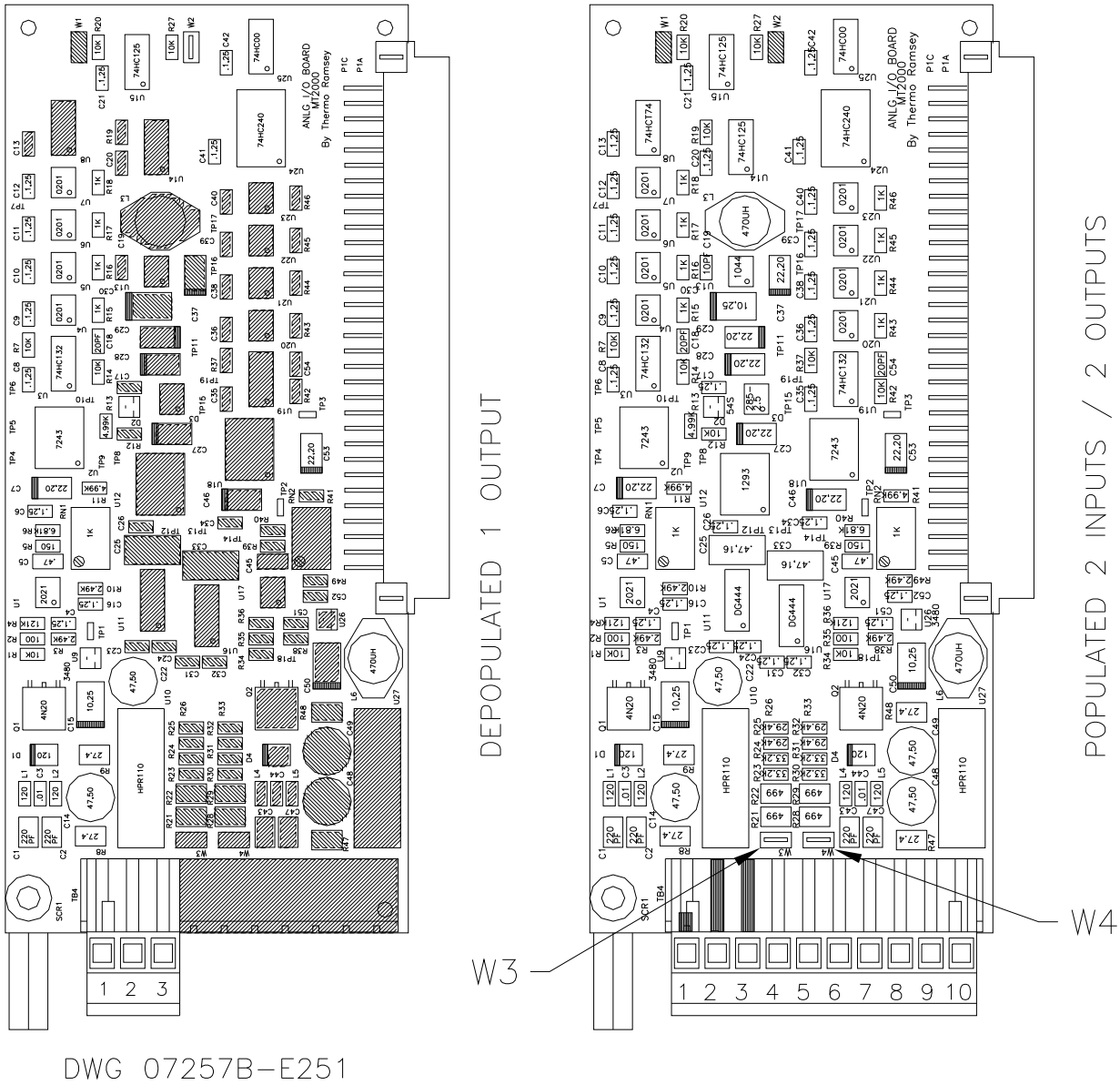

Figure 2-9. Analog I/O Board

Communications Board Configuration

The communication protocol allows a remote intelligent device to read and eventually write the contents of the registers.

During the communication activity, the feeder controller always acts as a Slave, meaning it responds to a request from a Master device on the line, but never attempts to send messages out.

The instrument reads the message and looks for the address, which is contained in an address byte in the query package. The message is then processed only if the address contained in the message matches the address specified in the set up data of the instrument.

The clock/calendar is located on the communication board. During AC losses or power off, RAM data retention and operation of the clock/calendar is provided by the battery located on the mother board.

One electrical interface may be selected accessed through one communication port. Up to three communication boards may be installed.

Below is a table which summarizes the jumper positions required for selection of each electrical interface mode (see Figure 2-10).

JUMPERS							
Mode	OP1	OP2	OP3	OP4	OP5	OP6	
RS-232	"A"	"A"	"A"	"A"	"A"	"B"	
RS-485	"B"	"A"	"B"	"B"	"MDP"	"TRM"	[Default)
20 mA	"B"	"B"	"A"	"A"	"A"	"C"	

<u>TABLE "MDP"</u>
<u>FOR RS-485 ONLY</u>
<u>OP5</u>
"A" NORMAL "A"
"B" MULTI-DROP

<u>TABLE "TRM</u>
<u>FOR RS-485 ONLY</u>
<u>OP6</u>
TERMINATED
"B" NOT TERMINATED

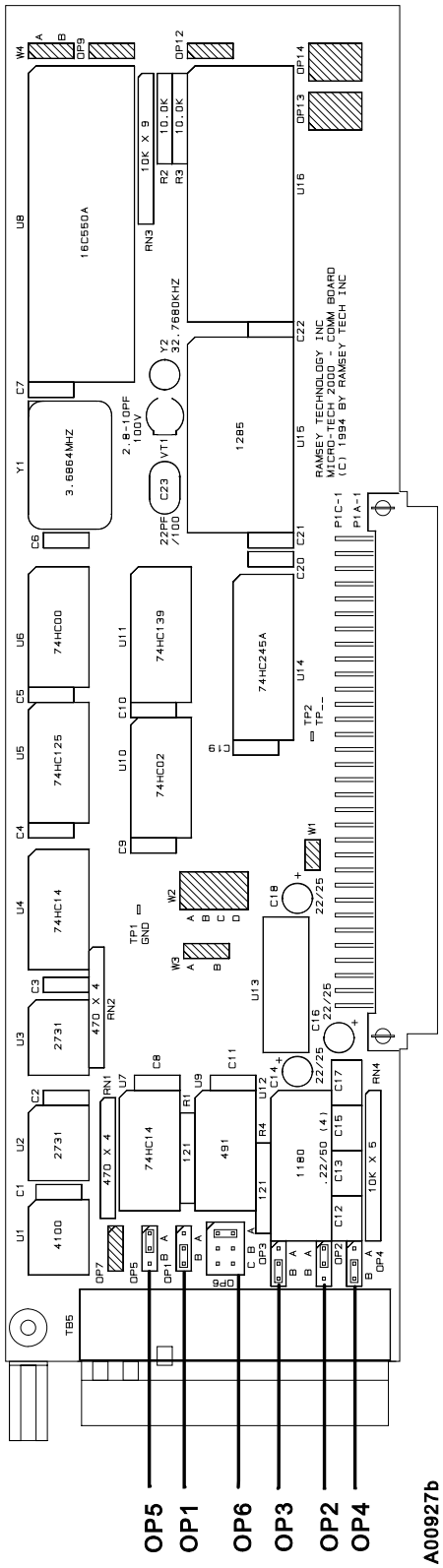

Figure 2-10. Comm “A” Board

Initial Setup Procedure

Following mechanical and electrical installation, it is necessary that you program field data that is specific to your application into the Micro-Tech 2104 Feeder Controller memory. The following setup procedure should be completed before programming your feeder controller. Refer to Chapter 3 of this manual if more details or assistance is necessary.

Determining Installation Parameters

Before applying power to the feeder scale system, it is necessary to complete the following statements. Refer to your System Data Sheet in the front of your feeder manual.

1. Scale Capacity

   Determine the scale's capacity in tons per hour and record the capacity below. (Example: 400.0)

   _____ (Tons Per Hour) Scale #1

   _____ (Tons Per Hour) Scale #2

2. Number of Load Cells

   _____ Scale #1

   _____ Scale #2

3. Load Cell Capacity

   From the scale data sheet located in the front of its manual, determine the load cell size in pounds. Record the weight below. (Example: 250.0)

   _____ pounds (Load Cell Weight) Scale #1

   _____ pounds (Load Cell Weight) Scale #2

4. Load Cell Sensitivity

   From the load cell name plate, determine the load cell sensitivity in mV/V. Record the sensitivity below. (Example 3.000 mV/V)

   _____ (Load Cell Sensitivity) Scale #1

   _____ (Load Cell Sensitivity) Scale #2

5. Load Cell Resistance

Measure the signal (output) resistance of each load cell with a digital VOM. Record the resistance below. (Example: 350.000)

_____ (Load Cell Resistance) Scale #1

_____ (Load Cell Resistance) Scale #2

Programming the Micro-Tech 2104 Feeder Controller

When power is first applied, the feeder controller steps the operator through menus and options that bring the system to a weighing state. Soft keys, numeric keys and the scroll control keys are used to select choices. The RUN and MENU control keys are inactive during this procedure.

After successful initial programming and scale calibration, proceed to Main Menu 4, I/O Scroll, and Main Menu 7, Control Scroll, for PID or PEIC controller setup.

CAUTION

Inside the Feeder Controller's front panel are two voltage selection slide switches ((Figure 2-11). Ensure they are in the correct position—either 110/120 or 220/240 VAC—before applying power. See Feeder Controller Configuration section.

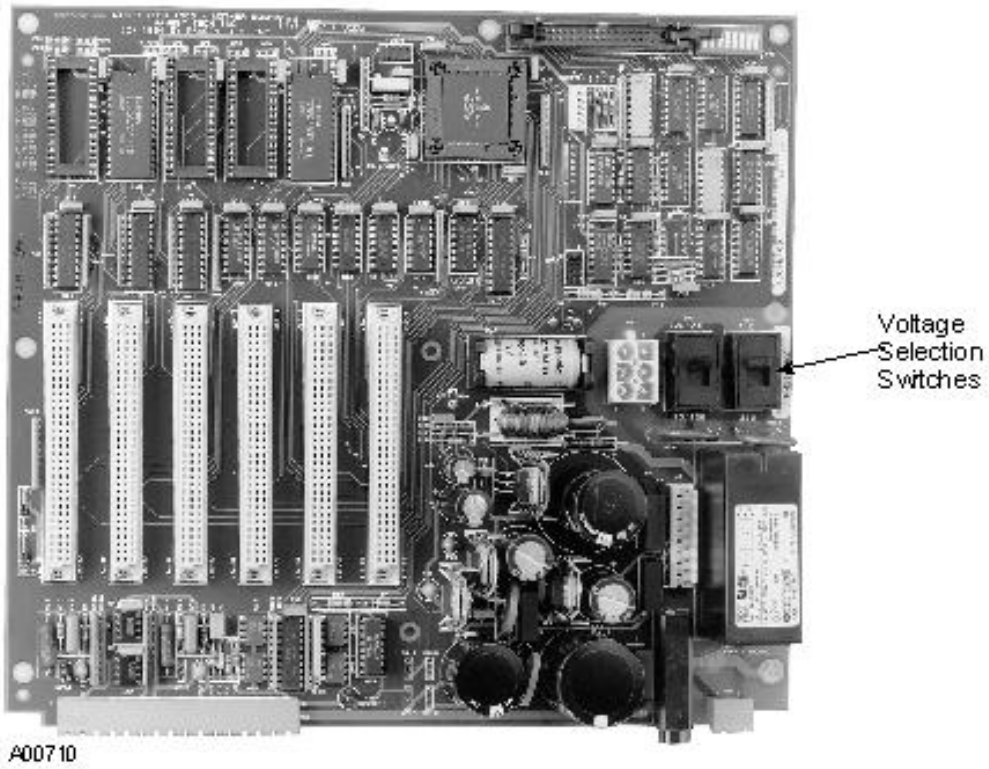

Figure 2-11. Micro-Tech 2104 CPU Board

1. Programming the Loss-In-Weight Feeder Controller

The programming mode begins the first time power is applied. Information requested by the instructional screens should be entered before moving to the next screen. The scale is calibrated at the end of this procedure provided the correct information is entered. The alarm light flashes during the programming procedure and clears when calibration is complete.

The programming mode begins with the following instructional screens.

```
        - MEMORY ERASED   -
Choose the language
key to continue to
ESP                       USA
```

The feeder controller is a dual language instrument. English or USA is always the first language. The standard configuration provides Spanish (ESP) as the second language. Other languages, such as German (GER), are available upon request (consult factory). Press the desired language.

```
Initial scale setup
and calibration.
Press down SCROLL.
```

Press the DOWN SCROLL key.

```
Press key under HELP
for more information

HELP
```

"HELP" is flashing

Press the HELP soft key.

```
Key with dot (soft
key) performs action
of word above it.
MORE            RETURN
```

When RETURN is pressed, the operator is returned to the previous screen. Pressing MORE advances the system to the next screen.

Press the MORE key.

```
Use down SCROLL key
to advance through
the menus.
MORE                    RETURN
```

Pressing MORE or RETURN reverts the screen back to previous screens in this series.

Press the DOWN scroll key.

Press SCROLL DOWN key to accept the default unit, or CHOICES soft key to scroll selections. Press ENTER to confirm your selection. Scroll down.

NOTE. Menus appearing during initial setup may operate differently in normal operation.

2. Select Measure Units

Measure units can be individually selected. The user must first decide if the English units will be used, or the Metric ones, or a combination of both.

```
        - DISPLAY SCROLL 1 -
Measure units
> English <
CHOICE                    ENTER
```

Default: ENGLISH (if USA language)
METRIC (if ESP language)

Selections: ENGLISH, METRIC, MIXED
If English, all units in English
If Metric, all units in Metric
If Mixed, units may be a combination of English and Metric

The rate will be displayed according to the units selected here.

Press ENTER soft key to accept the default unit, or CHOICES soft key to scroll selections. Press ENTER to confirm your selection. Scroll down.

```
        - DISPLAY SCROLL 2 -
Rate Units
> lb/h <
CHOICE                    ENTER
```

If ENGLISH:	Default:	LB/H
	Selections:	TPH, LTPH, LB/H, T/M, LT/M, LB/M, KG/H
If METRIC:	Default:	KG/H
	Selections:	T/H, KG/H, T/M, KG/M
If MIXED:	Default:	LB/H
	Selections:	T/H, KG/H, T/M, KG/M, TPH, LTPH, LB/H, T/M, LT/M, LB/M

The weights will be displayed according to the units selected here.

```
- DISPLAY SCROLL 3 -
Weight Units
> pounds <
CHOICE                ENTER
```

If ENGLISH:	Default:	POUNDS
	Selections:	PERC %, POUNDS, TONS, LTONS
If METRIC:	Default: KG	
	Selections:	PERC %, KG, TONNES
If MIXED:	Default:	POUNDS
	Selections:	PERC %, KG, TONNES, POUNDS, TONS, LTONS

Press ENTER soft key to accept the default unit, or CHOICES soft key to scroll selections. Press ENTER to confirm your selection. Scroll down.

The totals are displayed according to the units selected here.

```
- DISPLAY SCROLL 4 -
Total Units
> tons <
CHOICE                ENTER
```

If ENGLISH:	Default: TONS	
	Selections:	TONS, LTONS, POUNDS
If METRIC:	Default: TONNES	
	Selections:	TONNES, KG
If MIXED:	Default: TONS	
	Selections:	TONS, LTONS, POUNDS, TONNES, KG

Press ENTER soft key to accept the default unit, or CHOICES soft key to scroll selections. Press ENTER to confirm your selection. Scroll down.

3. Define the Number of Scales

The feeder controller can control two independent scales. The number of scales can be programmed according to the number of A/D boards installed.

This only appears if (2) A/D boards are installed.

```
        - SC DATA SCROLL 1 -
Number of scales
 1
ENTER
```

Default: 1
Min: 1
Max: 2

The scale soft key

There are several parameters that must be entered for each scale. If you have 2 scales, the SCALE soft key is displayed in the scroll positions where data needs to be entered. This key has a double function, first it indicates which scale the parameter is referring to. Example:

1 indicates that you are entering a parameter for scale 1. Second, it allows you to change the scale. Pressing the soft key below the indication changes the scale number.

The above symbol will be referred to in this manual as Scale #1 or 2.

4. Define Scale Capacity and Scale Divisions

The next entry is the scale capacity, which is the maximum capacity of the scale in weight. This entry also defines the default number of decimal places that are used for display weight values. Use numeric keys for entering the number, confirm with ENTER. Scroll down.

```
        - SC DATA SCROLL 2 -
Max. scale capacity
 100.0
ENTER                    SCALE#
```

Default: 100.0
Min: 1
Max: 200000

When the Scale capacity is entered, the number of decimal places is also defined. If, for example, the operator enters 500.0, this sets the "Scale Divisions" parameter to 0.1. Advancing to the next scroll, the operator first sees the Scale Division corresponding to the just entered Scale Capacity (in the example 0.1). If required, the operator is able to alter the Scale Division to any of the available options.

Press the ENTER soft key to accept the default divisions, or the CHOICES soft key to scroll selections. Press ENTER to confirm your selection. Scroll down.

```
        - SC DATA SCROLL 3 -
Scale divisions
> 0.1 <
CHOICE     ENTER     SCALE#
```

Default: 0.1
Selections: 0.1, 0.2, 0.5, 1, 2, 5, 10, 20, 50, 0.01, 0.02, 0.05, 0.001, 0.002, 0.005

5. Defining the Load Cells

Enter the number of load cells of your scale.

```
        - SC DATA SCROLL 4 -
# of load cells
   1
ENTER                    SCALE#
```

Default: 1
Min: 1
Max: 6

Enter the load cell capacity as it appears on the label placed on the load cell.

```
        - SC DATA SCROLL 5 -
Load cell capacity
 250.0 lbs
ENTER                    SCALE#
```

If ENGLISH or MIXED:		If METRIC:	
Default:	250.0 Lbs	Default:	100 kg
Min:	10	Min:	1
Max:	15000	Max:	5000

Enter the load cell sensitivity in mV/V as marked on the label of the load cell.

```
        - SC DATA SCROLL 6 -
Load cell sensit.
 3.000  mV/V
ENTER                    SCALE#
```

Default:	3.000 mV/V
Min:	0.500 mV/V
Max:	3.500 mV/V

The resistance of the bridge of each load cell is entered. The number of scrolls depends on the number of load cells specified for each scale.

```
        - SC DATA SCROLL 7A -
Load cell #1
Res              350.000   Ohms
ENTER                    SCALE#
```

Default:	350 Ohms
Min:	10 Ohms
Max:	1000 Ohms

If # of Load Cells is 2 or more:

```
        - SC DATA SCROLL 7B -
Load cell #2
Res              350.000   Ohms
ENTER                    SCALE#
```

Same default and limits of load cell #1.
If # of Load Cells is 3 or more:

```
        - SC DATA SCROLL 7C -
Load cell #3
Res              350.000   Ohms
ENTER                    SCALE#
```

Same default and limits of load cell #1.
If # of Load Cells is 4 or more:

```
        - SC DATA SCROLL 7D -
Load cell #4
Res              350.000   Ohms
ENTER                    SCALE#
```

Same default and limits of load cell #1.
If # of Load Cells is 5 or more:

```
        - SC DATA SCROLL 7E -
Load cell #5
Res              350.000   Ohms
ENTER                    SCALE#
```

Same default and limits of load cell #1.
If # of Load Cells is 6:

```
        - SC DATA SCROLL 7F -
Load cell #6
Res              350.000   Ohms
ENTER                    SCALE#
```

Same default and limits of load cell #1.

6. Defining the Lever Ratio

Enter the lever ratio of the system.

```
         - SC DATA SCROLL 8 -
Lever ratio
 1.000
ENTER                    SCALE#
```

Default: 1.000
Min: 0.100
Max: 100.000

7. Quick Automatic Calibration of the Scale(s)

The system performs a quick calibration of the scale(s). The scale is first zeroed (3 seconds) and then calibrated using the load cell capacity, sensitivity and lever ratio just entered. During this time, the following screen is displayed:

```
CALIBRATION
IN
PROGRESS
```

When calibration procedure is completed, the following message is displayed for 3 seconds:

```
S1 CALIBRATED
S2 CALIBRATED
```

In case the load cell is not connected or a failure is detected, the message is 'S# NOT CALIBRATED'.

Then the following message is displayed

```
Press RUN to start
or MENU for scrolls
```

The field data entered during this procedure enabled the feeder controller to perform an unassisted zero balance and span calibration. Assuming no mistakes were made, the scale is calibrated and is ready for use at this time.

NOTE. The span number was calculated from the data that was entered during this initial calibration setup procedure. This span number is based on a perfect mechanical alignment of the scale. Therefore, verify this by performing a span calibration procedure.

3

Chapter 3 Operation

General

Your Ramsey feeder controller is capable of accurate weighing, provided it is installed, calibrated, operated, and maintained in complete accordance with the instructions contained in this manual, along with your feeder installation manual.

Overview

Model 2104 feeder controller is a microcomputer-based instrument that accepts and conditions weight signals from one or two scales, and provides visual and electrical outputs for total weight. A stable 10 volt DC excitation voltage capable of exciting up to six 350 ohm strain gauge load cells is produced by the feeder controller. Sense lead terminations are also provided for six wire load cell cable.

The feeder controller output can be PID, PID + S or PEIC control. PEIC control can be an analog output or time proportional "increase/decrease" digital.

Life expectancy of the RAM support battery is approximately ten years, if power is not applied. Under normal operation where power is on continuously, life expectancy will be much longer.
Errors may occur during initial calibration and their reason must be corrected during initial calibration. During normal operation, an error would most likely indicate a failure in the system or improper operation.

Front Panel

The front panel (Figure 3-1) contains the necessary status indicators and keys to enable the operator to perform calibrations and all required operations after the feeder controller has been configured in Section on Feeder Controller Configuration.

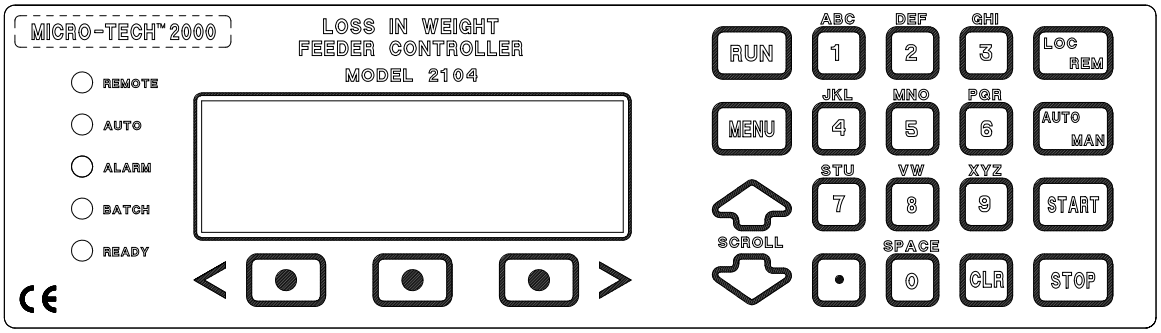

A01333

Figure 3-1. Model 2104 Feeder Controller Front Panel

LED Status Indicators

The five red status indicators show the status of the feeder controller.

1. Remote

   Lit when the feeder controller (or displayed scale if two are defined) is in REMOTE.

2. Auto

   Lit when the feeder controller (or displayed scale if two are defined) is in AUTOMATIC.

3. Alarm

   Alarm indication flashes if an alarm is pending, whether the alarm is NEW or has been ACKNOWLEDGED.

4. Batch

   See Section on Load Out Option.

5. Ready

   Ready indication turns on if the scale is calibrated (zero and span calibration complete) and no SHUT DOWN conditions are active.

   If more than one scale is defined, the READY indication refers to the displayed scale.

Keyboard

1. Run - Access the Run Menu. Returns feeder controller to Run Mode whenever pressed. See Section on Run Menu for detailed description.

2. Menu - Permits entry to menus, see Section on Menu Displays.

3. Up and Down Arrow - Scrolls up or down in the selected menu.

4. Soft Keys - Select displayed function directly above the key. Moves cursor left and right during string editing.

5. Alpha/Numeric Keys 1 through 0 - Enter numerals and letters when string editing. Similar to telephone keys.

6. Decimal Point Key - Enters decimal point.

7. Clear Key - Removes wrong entries prior to pressing ENTER soft key.

8. Local/Remote Key - Used to change the status of the feeder controller between LOCAL and REMOTE depending on Set point source. If Set point source is Local, the LOC/REM key cannot change status to remote set point. If Set point source is Analog in or Serial in, the LOC/REM key can change status to either remote or local set point. If two scales are defined, it affects only the displayed scale. It is inhibited when digital function LOC/REM is assigned.

9. Auto/Man Key - Used to change the status of the feeder controller between AUTOMATIC and MANUAL. If two scales are defined, it affects only the displayed scale. It is inhibited when the digital function AUTO/MAN is assigned.

10. Print - Starts printout. COMM option is required. See Main Menu 5 in Appendix C.

11. Start - Starts load out. Restart if interrupted.

12. Stop - Interrupts load out. Aborts load out if already interrupted.

NOTE. Start-Stop keys are only active with load Out option.

Display

The four-line display indicates actual running information or displays menu entry information.

Menu Displays

The feeder controller is a menu driven machine that allows the operator to access all setup, test and calibration parameters. Main Menu screens 1 through 7 can be accessed at anytime by pressing the MENU key until the desired menu screen is displayed. Menu scrolls may be selected by pressing the soft key directly below the desired scroll, and then using the Up/Down scroll key.

If the feeder controller is password protected, the appropriate password must be entered prior to making changes or performing routine calibration. Menus may be viewed without entering a password, but no entries are allowed unless the password is entered.

Optional scrolls are only available if the available option has been installed. The following screens are activated by the MENU key.

```
                - MAIN MENU 1 -
Press MENU for more
CAL             CAL
ZERO            SPAN      PRINT
```

```
                - MAIN MENU 2 -
Press MENU for more
                SCALE     CALIB
DISPLAY         DATA      DATA
```

```
                - MAIN MENU 3 -
Press MENU for more

PROT   DIAG       TEST
```

```
                - MAIN MENU 4 -
Press MENU for more
I/O          ALARMS      LOAD
DEF.      DEFIN.        OUT
```

```
                - MAIN MENU 5 -
Press MENU for more

COMM A     COMM B     PRINT
                        *
```

* Can be AB I/O or Pro DP

```
                - MAIN MENU 6 -
Press MENU for more
AUDIT
TRAIL           LINEAR
```

```
                - MAIN MENU 7 -
Press MENU for more

CNTRL SYSTEM
```

Normal Power On

When the feeder controller is normally powered on after a successful initial programming, the RUN Menu is displayed unless the hardware configuration has been changed.

```
0000.00 Lb/h

TOTALS
```

Hardware Configuration

If the hardware configuration detected at power on differs from the one recorded in memory, the following screen is displayed. This only happens if a circuit board has been added or removed during power off, or a board has failed.

```
SLOT #      n       CHANGED
Acquire new
configuration ?
YES                 NO
```

The screen disappears after 10 seconds if the question is not answered. The feeder controller assumes the answer is NO. "HW CONFIG. CHANGED" alarm is on and cannot be reset.
The above screen appears each time power is cycled.

If a board is removed or added, and this is a permanent change in configuration, answer YES.

1. A board is removed and is not replaced:

   The feeder controller cancels from memory the setup data of the board that is removed. If the board is added again, the setup data for the board has to be entered again.

2. A board is added:

The feeder controller acquires the new hardware configuration. Setup data for the new board must be entered.

NOTE. Check the setup configuration in the I/O Definition Scroll if an I/O board is removed or added. I/O assignments change when the number of I/O boards change (see Appendix C).

If the reason for the message is not known, or if the change in configuration is temporary and the operator does not want to lose the original setup, answer NO.

1. A board is removed:

   The feeder controller resumes operation, retaining setup data of the board that was removed. All other boards continue working normally. No change occurs in I/O Definition.

2. A board is added:

   The feeder controller resumes normal operation without recognizing the new board.

   If NO is pressed, the "HW CONFIG. CHANGED" alarm stays on.

Run Menu

When the feeder controller is normally powered on after initial programming, the main Run Menu is displayed. The Run Menu can always be accessed by pressing the RUN key on the front panel.

The Run Menu is a multi screen menu consisting of two scrolls. SCROLL DOWN and SCROLL UP keys are used to move through the scrolls.

Main Run

1. The first Run scroll appears as follows:

```
R                 0000.00 Lb/h

PRINT      TOTALS
```

The first line always displays the RATE. An "R" appears on the left side during the REFILL. The "R" indication flashes during refill and is steady during the stabilization time at the end of the refill while the system is waiting to restart regulation.

The second and third lines are by default blank, but can be programmed to show:

- the actual weight
- the reset total value
- the master total value
- date and time
- a bar graph indicator

The fourth line displays the soft keys. The PRINT key is only displayed if a COMM A board is installed and configured as printer. When pressed, the PRINT key enters the print menu and allows printing. If a second scale is defined, the PRINT key is replaced by the SCALE # key. The Print Menu can be accessed through Main Menu 1.

The TOTALS key scrolls between Master Total and Reset Total. Reset Total can be reset.

The message ALARM appears if an alarm is pending. The ALARM message and the alarm status indicator flash.

2. The second Run Menu appears as follows:

```
R                    000.0 Lb/h
Control                 000.0 %
||||||||><||||||||
                ADV
```

Password: Operator

The fourth line displays the soft keys. The PRINT key is only displayed if a COMM A board is installed and configured as printer. When pressed, the PRINT key enters the print menu and allows printing. If a second scale is defined, the PRINT key is replaced by the SCALE # key. The Print Menu can be accessed through Main Menu 1.

The TOTALS key scrolls between Master Total and Reset Total. Reset Total can be reset.

The message ALARM appears if an alarm is pending. The ALARM message and the alarm status indicator flash.

Line one is the same as the first Run scroll.

In the second line, the following variables are displayed by pressing the ADVANCE key:

- Control output in percent
- Set point of regulation
- Actual regulation error in percent

Line three is the BAR GRAPH. The bar graph graphically displays the deviation. The bar's range is ±10%.

The ALARM and SCALE # keys function the same way as in the first Run scroll.

Totals

The key below TOTALS allows scrolling between the Master Total and Reset Total screens.

```
MASTER TOTAL
SINCE      00-00-0000
0000000.0  Tons
```

Master Total cannot be reset. The second line only appears if the optional COMM "A" board is installed. The date is entered during initial programming.

```
RESET TOTAL
SINCE      00-00-0000
0000000.0  Tons
RESET
```

Reset Total can be reset at any time. No password is required for reset. The second line appears if the optional COMM "A" board is installed.

When RESET is pressed, the following screen is displayed:

```
Do you wish to clear
RESET total?

YES                NO
```

Press "YES" to clear the total. Press "NO" to skip clearing.

Print Key

If the optional COMM "A" board is installed, the PRINT key is active if selected in COMM A Scroll.

The following screen is displayed:

```
                    000.00 Lb/h

PRINT  TOTALS
```

When PRINT is pressed, the following screen is displayed:

```
              -  PRINTER SCROLL  -
COM #1  no data
Start print   TOTALS
PRINT       RETURN        COM
```

Password: Not Required

The second line is the status of the printer:

NO DATA
Indicates the printer is idle, no data is being sent to the printer.

IS RUNNING
The system is sending data to the printer.
The third line indicates what kind of data is printed if the PRINT key is pressed. The UP and DOWN keys select between:

TOTALS
Print totals (all scales if more scales are defined)

TOTALS S1
Print totals scale 1 (only if enabled)

TOTALS S2
Print totals scale 2 (only if enabled)

SETUP
Print the feeder controller setup data (not available in this version)

TRAILS
If audit trails option is active, print audit trails data.
Print starts after the PRINT key is pressed.

The COM key allows printer selection if more than one printer is installed.

Examples of data that can be printed:

Print TOTALS, default:

If one scale is defined:

TOTALS REPORT

DATE: 12-10-1998
TIME: 8:12a

MASTER TOTAL: 0.00 Tons
RESET TOTAL: 0.00 Tons

If more scales are defined:

TOTALS REPORT

DATE: 12-10-1998
TIME: 8:12a

SCALE 1
MASTER TOTAL: 0.00 Tons
RESET TOTAL: 0.00 Tons

SCALE 2
MASTER TOTAL: 0.00 Tons
RESET TOTAL: 0.00 Tons

Print ALARM:

12-10-1998 8:14a
Clock fail

Print AUDIT TRAILS:

TRAIL RECORD NR 1
DATE 12-10-1998 TIME 11:59p
VARIABLE scale cap
NEW 400.00
OLD 500.00

TRAIL RECORD NR 2
DATE 12-10-1998 TIME 11:31p
VARIABLE span
NEW 250000
OLD 300000

TRAIL RECORD NR 3
DATE 12-10-1998 TIME 11:59p
VARIABLE div (e)
NEW 0.05
OLD 0.1

See Appendix C, Main Menu 5, for additional printer setup information.

Alarm Pending

The message ALARM appears in the right soft key if an alarm is pending. The alarm status indicator also is flashing.

```
00000000 Tons
Z        000000 Tph

TOTALS          ALARM
```

ALARM is flashing

The following menu is displayed after pressing the ALARM soft key.

```
ALARM    NEW
xxxxxxxxxxxxxxxxxxxx
MM-DD-YYYY          HH:MM
RESET               NEXT
```

The keyword "NEW" indicates an alarm that has not been acknowledged yet. When the operator presses the RESET key to clear the alarm, the alarm disappears only if the reason that caused the alarm to occur does not exist anymore. If the alarm is still pending, the keyword "ACK" is displayed instead of "NEW".
The third line shows the date and time only if the optional COMM board is installed.

The NEXT key is used to scroll between the pending alarms. The string "xxxxxxxxxxxxxxxxxxxx" stands for one of the following alarm conditions.

Pressing RUN returns to Main RUN Menu.

1	Clock Fail
2/4	Load Cell Fail
5	Ram Fail
6	Rom Fail
7/9	High Weight S#
10/12	LowWeight S#
13/15	High Rate S#
16/18	Low Rate S#
19	Warm Start
20	Cold Start
21	P. D. Calibration
22/24	Calibration Time S#
25	External Alarm #1
26	External Alarm #2
27	External Alarm #3
28/33	Hardware Configuration Changed
34	BCD Overflow
35	Math Error
36	Printer Error
37	Communication Error
38/40	High Positive Deviation S#
41/43	HHigh Positive Deviation S#
44/46	High Negative Deviation S#
47/49	HHigh Negative Deviation S#
50	Refill Timeout S#
51/53	Overflow Totalizer S#
59	AB RI/O Error
60	PROFIBUS-DP Error

Refer to Chapter 4, Maintenance, for more alarm information.

Load Out

The Load Systems Menu is visible if the Load Out option is installed. See Load Out, Appendix D, for detailed description of the Load Out option. Press the DOWN or UP scroll key for access.

```
BATCH #      0 STOP
TOTAL  00000.0 Tons
SETPT  00000.0 Tons
ENTER          CLEAR
```

Password: Operator

BATCH # increments by one after each batch.

The status can be: STOP, RUN H, RUN L, WAIT S, STABIL

ENTER edits the set point.

CLEAR zeros the batch counter.

The symbol S is displayed if the batch is standing by.

Calibration

Main Menu 1 contains the Calibration Menu. Menu 1 is selected by pressing the MENU key until Main Menu 1 appears. Desired calibration scrolls are selected by pressing the soft keys directly below the desired scroll.

```
                - MAIN MENU  1  -
Press MENU for more
CAL          CAL
ZERO       SPAN           PRINT
```

PRINT message is assigned to the right hand soft key only if more than one scale is defined and a COMM A board is installed.

Zero Calibration Scroll

The Zero Calibration is implemented as a machine directed procedure.

1. Auto Zero

If only one scale is defined:

```
              - ZERO CAL  -
Empty scale, then
press START.
START                      MANUAL
```

Password: Operator

If two scales are defined:

```
              - ZERO CAL  -
Empty scale, then
press START.
START    SCALE#       MANUAL
```

The scale must be kept empty during auto zero. A complete zeroing

procedure requires 60 seconds, but can be reduced by pressing END in the next scroll.

Indication S# in the following scrolls will appear only if more than one scale is defined. # represents the active scale number.

When START is pressed, the following screen is displayed:

```
S# AUTOZEROING
Time remaining        60
Gross          000.0 W.U.
END       ABORT
```

During Auto Zero, weight resolution is 10 times higher than normal. The number of seconds in line 2 corresponds to the time remaining for completing the test.

When zero is reached or END is pressed, the system displays the following screen:

```
S# AUTOZERO COMPLETE
Error ±000.00 %
Change zero ?
YES            NO
```

The word COMPLETE is flashing. The percentage of error is related to the scale capacity.

If YES is pressed, the next screen is shown:

```
S# ZERO # CHANGED
Old zero       # 00000
New zero       # 00000
RUN    MENU
```

If NO is pressed, the next screen is shown:

```
S# ZERO # UNCHANGED
Old zero       # 00000
New zero       # 00000
RUN    MENU
```

Note that in this case old zero and new zero are shown equal.

The zero constants are shown in A/D counts.

2. Manual Zero

The Manual Zero procedure allows the operator to directly enter the zero constant if known.

If only one scale defined:

```
        - MANUAL ZERO -
Gross          000.0 W.U.
Zero #         00000
ENTER                EXIT
```

Password: Operator

Default: 40000
Min: 0
Max: 120000

If two scales defined:

```
        - MANUAL ZERO -
Gross          000.0 W.U.
Zero #         00000
ENTER     SCALE #    EXIT
```

Pressing EXIT returns to Main Menu 1.

Span Calibration

The span calibration can be done in two different ways: R-CAL or Test Weights.

The system allows the operator to select which one of the two methods to be used for normal calibration and calibration's check. The selection is made in CALIB DATA scroll 1.

1. Automatic Span Calibration With R-CAL

   A. Starting an R-Cal Calibration

```
        - AUTOSPAN R Cal  -
Empty scale, then
press START.
START     SCALE#    MANUAL
```

Password: Operator

When START is pressed, the R cal relay energizes. A half second delay occurs after START for the weight to stabilize.

NOTE. The operator must insure that the scale is empty before pressing start.

B. Executing the Span Calibration

Indication S# in the following scrolls appears only if more than one scale is defined. # represents the active scale number.

Whichever method has been used to start automatic span calibration, after START is pressed, the following screen is displayed:

Entry point when REPEAT is pressed.

```
S# AUTOSPANNING
Time remaining 60
Gross          000.0 W.U.
END              ABORT
```

During Auto Span, the weight resolution is 10 times higher than normal. The entire function takes 60 seconds to be completed. The remaining time is displayed in line 2. The END key can be used to conclude the function in less time.

C. Recording the New Span

The system calculates the new span.

```
S# AUTOSPAN COMPLETE
Error +/-00.00 %
Change span ?
YES        NO       FACTOR
```

The word "COMPLETE" is flashing.

FACTOR key is displayed only if an autospan with test weight has been previously executed.

If YES is pressed, the following screen is displayed:

```
S#    SPAN #    CHANGED
Old span        # 000000
New span        # 000000
MENU            REPEAT
```

REPEAT moves back to (B) above, and calibration restarts.

If NO is pressed, the following screen is displayed:

```
S#  SPAN #    UNCHANGED
Old span        # 000000
New span        # 000000
MENU            REPEAT
```

Note the Old span and the New span are shown equally. This is because no change to the span has been done.

If FACTOR is pressed, the RCAL factor is computed. The following screen is displayed:

```
S#  FACTOR  ACQUIRING
New fact    000000 %
Change factor ?
YES             NO
```

NO moves back to (C) above.

YES acquires new factor. If pressed, the following screen is displayed:

```
S#  FACTOR CHANGED
Old fact        000000 %
New fact        000000 %
MENU            REPEAT
```

D. Ending an Auto Span Procedure With R-CAL

Press RUN. The Rcal relay is de-energized and the display is locked for 3 seconds.

2. Automatic Span Calibration With Test Weights

A. Starting Span Calibration With Test Weights

```
        -  AUTOSPAN Weights  -
Apply  Weights then
press START.
START      SCALE#   MANUAL
```

Password: Operator

The operator must apply the test weights on the scale before pressing start.

When START is pressed, the span function begins.

B. Executing the Span Calibration

Indication S# in the following scrolls appears only if more than one scale is defined. # represents the active scale number.

After START is pressed, the following screen is displayed:

Entry point when REPEAT is pressed (see below).

```
S#  AUTOSPANNING
Time remaining     60
Gross       000.0 W.U.
END                ABORT
```

During Auto Span, the weight resolution is 10 times higher than normal. The entire function takes 60 seconds to be completed. The remaining time is displayed in line 2. The END key can be used to conclude the function in less time.

C. Recording the New Span

The system calculates the new span based on the result of the test performed with the selected method:

```
S#  AUTOSPAN COMPLETE
Error +/-00.00 %
Change span ?
YES     NO
```

The word "COMPLETE" is flashing.

If YES is pressed, the following screen is displayed:

```
S#  SPAN #  CHANGED
Old span          # 000000
New span          # 000000
MENU      REPEAT   FACTOR
```

FACTOR key is displayed only if an autospan with RCAL has been previously executed.

REPEAT moves back to (B) above, and calibration restarts.

If NO is pressed, the following screen is displayed:

```
S#  SPAN #  UNCHANGED
Old span          # 000000
New span          # 000000
MENU          REPEAT
```

Note the Old span and the New span are shown equally. This is because no change to the span has been done.

If FACTOR is pressed, the RCAL factor is computed. The following screen is displayed:

```
S#  FACTOR  ACQUIRING
New fact          000000 %
Change factor ?
YES         NO
```

NO moves back to (C) above.

YES acquires new factor. If pressed, the following screen is displayed:

```
S#  FACTOR  CHANGED
Old fact        000000 %
New fact        000000 %
MENU   REPEAT
```

3. Manual Span

If the span constant is known, the manual span procedure allows the operator to manually change span.

NOTE. If the span is manually entered, the RCAL factor is set to INVALID.

```
          -  MANUAL SPAN  -
Gross    000.0 W.U.
Span # 0000000
ENTER      SCALE#      EXIT
```

Password: Operator

Default: 1166667
Min: 500000
Max: 45000000

The RUN key returns to Run Menu.

Permanent Scroll Record – Setup Scrolls

MAIN MENU 1

ZERO SCROLL

Zero # _____

SPAN SCROLL

Span # _____

MAIN MENU 2

DISPLAY SCROLL

1. Measure Units _____
2. Rate Units _____
3. Weight Units _____
4. Total Units _____
5. Language _____
8. Run Display, Line 2 _____
9. Run Display, Line 3 _____
10. Display Rate Division _____
11. Display Rate Damping _____
12. Display Weight Damping _____
13. Alternate Scales in RUN _____

SCALE DATA SCROLL

1. Number of Scales _____

2.	Max. Scale Capacity		_____			
3.	Scale Divisions		_____			
4.	No. of Load Cells	Scale #1	_____	Scale #2	_____	
5.	Loadcell Capacity	Scale #1	_____	Scale #2	_____	
6.	Loadcell Sensitivity	Scale #1	_____	Scale #2	_____	
7A.	Loadcell Resistance #1	Scale #1	_____	Scale #2	_____	ohms
7B.	Loadcell Resistance #2	Scale #1	_____	Scale #2	_____	ohms
7C.	Loadcell Resistance #3	Scale #1	_____	Scale #2	_____	ohms
7D.	Loadcell Resistance #4	Scale #1	_____	Scale #2	_____	ohms
7E.	Loadcell Resistance #5	Scale #1	_____	Scale #2	_____	ohms
7F.	Loadcell Resistance #6	Scale #1	_____	Scale #2	_____	ohms
8.	Lever Ratio	Scale #1	_____	Scale #2	_____	

CALIBRATION DATA SCROLL

1.	Calibration Mode	Scale #1	_____	Scale #2	_____
2.	Total Test Weight	Scale #1	_____	Scale #2	_____
3.	R-Cal Resistance	Scale #1	_____	Scale #2	_____
4.	R-Cal Constant	Scale #1	_____	Scale #2	_____
5.	R-Cal Factor	Scale #1	_____	Scale #2	_____
6.	Calibration Interval	Scale #1	_____	Scale #2	_____
7.	Calibration Date	Scale #1	_____	Scale #2	_____

MAIN MENU 3

PROTECTION SCROLL

1.	Protection Level	_____	None	_____	Ltd	_____ Prot

DIAGNOSTICS SCROLL

1.	A/D Gross	Scale #1	_____	Scale #2	_____
	A/D Net	Scale #1	_____	Scale #2	_____
2.	Weight on Load Cell	Scale #1	_____	Scale #2	_____
2A.	Load Cell Output Zero	Scale #1	_____	Scale #2	_____
2B.	Load Cell Output Span	Scale #1	_____	Scale #2	_____

3. Service Password _____

4. Operator Password _____

5. Software Version _____

8. Board Type Slot #1 _____

9. Board Type Slot #2 _____

10. Board Type Slot #3 _____

11. Board Type Slot #4 _____

12. Board Type Slot #5 _____

13. Board Type Slot #6 _____

MAIN MENU 4

I/O DEFINE SCROLL

1. Current Output #1 Define _____

Current Output #2 Define _____

Current Output #3 Define _____

Current Output #4 Define _____

1A. Current Output #1 Range _____ mA

Current Output #2 Range _____ mA

	Current Output #3 Range	_____	mA
	Current Output #4 Range	_____	mA
1B.	Current Output #1 Delay	_____	sec
	Current Output #2 Delay	_____	sec
	Current Output #3 Delay	_____	sec
	Current Output #4 Delay	_____	sec
1C.	Current Output #1 Damping	_____	sec
	Current Output #2 Damping	_____	sec
	Current Output #3 Damping	_____	sec
	Current Output #4 Damping	_____	sec
2A.	Analog Input #1 Definition	_____	
	Moisture Input Calibrate #1	_____ %	_____ mA
	Moisture Input Calibrate #2	_____ %	_____ mA
	Remote Setpoint Calibrate #1	_____ %	_____ mA
	Remote Setpoint Calibrate #2	_____ %	_____ mA
2B.	Analog Input #2 Definition	_____	
	Moisture Input Calibrate #1	_____ %	_____ mA
	Moisture Input Calibrate #2	_____ %	_____ mA
	Remote Setpoint Calibrate #1	_____ %	_____ mA
	Remote Setpoint Calibrate #2	_____ %	_____ mA
2C.	Analog Input Damping	_____ sec	

3. Digital Input Define	Physical Input	Status NC/NO
External Alarm 1		

External Alarm 2		
External Alarm 3		
Reset Alarms		
Print		
Print S1		
Print S2		
Reset Tot		
Reset Tot S1		
Reset Tot S2		
Refill		
Refill S1		
Refill S2		
Loc/Rem Control		
Loc/Rem Control S1		
Loc/Rem Control S2		
Auto/Man Control		
Auto/Man Control S1		
Auto/Man Control S2		
Running		
Running S1		
Running S2		
Regulation Interlock		
Regulation Interlock S1		

	Regulation Interlock S2		
4.	Digital Output Define	Physical Input	Status NC/NO
	Alarm		
	Shutdown		
	Ready		
	Refill		
	Refill S1		
	Refill S2		
	High weight		
	High weight S1		
	High weight S2		
	Low weight		
	Low weight S1		
	Low weight S2		
	High weight		
	High weight S1		
	High weight S2		
	Low weight		
	Low weight S1		
	Low weight S2		
	H Dev Pos		
	H Dev Pos S1		

	H Dev Pos S2	
	H Dev Neg	
	H Dev Neg S1	
	H Dev Neg S2	
	HH Dev Neg	
	HH Dev Neg S1	
	HH Dev Neg S2	
	Loc/Rem	
	Loc/Rem S1	
	Loc/Rem S2	
	Auto/Man	
	Auto/Man S1	
	Auto/Man S2	
	Increase	
	Increase S1	
	Increase S2	
	Decrease	
	Decrease S1	
	Decrease S2	
	Totalizer	
	Totalizer S1	
	Totalizer S2	
5.	BCD Output Variable	

		_____
5A.	BCD Output Polarity	_____
5B.	BCD Output Parity	_____
6.	BCD Input Variable	_____
6A.	BCD Input Polarity	_____
7A.	Remote Counter Div.	_____
7B.	Remote Counter Pulse Width	_____

ALARMS SCROLL

1.	High Weight	_____ Yes	_____ No
1A.	High Weight Set	_____ %	
1B.	High Weight Delay	_____ Sec	
2.	Low Weight	_____ Yes	_____ No
2A.	Low Weight Set	_____ %	
2B.	Low Weight Delay	_____ Sec	
3.	High Rate	_____ Yes	_____ No
3A.	High Rate Set	_____ %	
3B.	High Rate Delay	_____ Sec	
4.	Low Rate	_____ Yes	_____ No
4A.	Low Rate Set	_____ %	
4B.	Low Rate Delay	_____ Sec	
5.	High Pos. Dev.	_____ Yes	_____ No
5A.	High Pos. Dev. Set	_____ %	_____ Sec
6.	High High Pos. Dev.	_____ Yes	_____ No
6A.	High High Pos. Dev. Set	_____ %	_____ Sec

7.	High Neg. Dev.	_____ Yes	_____ No	
7A.	High Neg. Dev. Set	_____ %	_____ Sec	
8.	High High Neg. Dev.	_____ Yes	_____ No	
8A.	High High Neg. Dev. Set	_____ %	_____ Sec	
9.	Alarm Set As	☐ Alarm	☐ Shutdown	☐ None
	#1 – Clock Fail	☐ Alarm	☐ Shutdown	☐ None
	#2/4 – Load Cell Fail	☐ Alarm	☐ Shutdown	☐ None
	#5 – Ram Fail	☐ Alarm	☐ Shutdown	☐ None
	#6 – Rom Fail	☐ Alarm	☐ Shutdown	☐ None
	#7/9 – High Weight	☐ Alarm	☐ Shutdown	☐ None
	#10/12 – Low Weight	☐ Alarm	☐ Shutdown	☐ None
	#13/15 – High Rate	☐ Alarm	☐ Shutdown	☐ None
	#16/18 – Low Rate	☐ Alarm	☐ Shutdown	☐ None
	#19 – Warm Start	☐ Alarm	☐ Shutdown	☐ None
	#20 – Cold Start	☐ Alarm	☐ Shutdown	☐ None
	#21 – P.D. Calibrate	☐ Alarm	☐ Shutdown	☐ None
	#22/24 – Calib. Time	☐ Alarm	☐ Shutdown	☐ None
	#25 – External Alarm #1	☐ Alarm	☐ Shutdown	☐ None
	#26 – External Alarm #2	☐ Alarm	☐ Shutdown	☐ None
	#27 – External Alarm #3	☐ Alarm	☐ Shutdown	☐ None
	#28/33 – Hdw. Cnfg. Chg.	☐ Alarm	☐ Shutdown	☐ None
	#34 – BCD Overflow	☐ Alarm	☐ Shutdown	☐ None
	#35 – Math Error	☐ Alarm	☐ Shutdown	☐ None

#36 – Printer Error	☐ Alarm	☐ Shutdown	☐ None
#37 – COMM. Error	☐ Alarm	☐ Shutdown	☐ None
#38/40 – High Pos. Dev. S#	☐ Alarm	☐ Shutdown	☐ None
#41/43 – High High Pos. Dev. S#	☐ Alarm	☐ Shutdown	☐ None
#44/46 – High Neg. Dev. S#	☐ Alarm	☐ Shutdown	☐ None
#47/49 – High High Neg. Dev. S#	☐ Alarm	☐ Shutdown	☐ None
#50 – Refill Timeout S#	☐ Alarm	☐ Shutdown	☐ None
#51/53 – Overflow totalizer S#	☐ Alarm	☐ Shutdown	☐ None
#56 – Batch Deviation	☐ Alarm	☐ Shutdown	☐ None
#59 – AB RI/O	☐ Alarm	☐ Shutdown	☐ None
#60 – PROFIBUS-DP	☐ Alarm	☐ Shutdown	☐ None

MAIN MENU 5

COMM A SCROLL

1. Baud Rate Port #1 _____
2. Set Parity Port #1 _____
3. Stop Bits Port #1 _____
4. Word Length Port #1 _____
5. Protocol Port #1 _____
6. Baud Rate Port #2 _____
7. Set Parity Port #2 _____
8. Stop Bits Port #2 _____
9. Word Length Port #2 _____
10. Protocol Port #2 _____

		_____
11.	Clear to Send	_____
12.	Address	_____
13.	Access Level	_____

PRINT SCROLL

1.	Handshaking	_____
2.	End of Line	_____
3.	Delay End of Line	_____
4.	Form Feed	_____
5.	Print Interval	_____
6.	Print Time #1	_____
7.	Print Alarms	_____
8.	Totals Report Format	_____
9.	String #1	_____
9A.	Contents String #1	_____
9B.	String #1 Position	_____
10.	String #2	_____
10A.	Contents String #2	_____
10B.	String #2 Position	_____
11.	String #3	_____
11A.	Contents String #3	_____
11B.	String #3 Position	_____
12.	Date Position	_____
13.	Time Position	_____

		_____
14.	Reset Total Position	_____
15.	Master Total Position	_____
16.	Weight Position	_____
17.	Rate Position	_____

MAIN MENU 6

AUDIT TRAIL SCROLL

1.	Audit Trails	_____ Yes	_____ No

LINEARIZATION SCROLL	Scale #1	Scale #2
1. Linearization	_____ Yes	_____ No

		Weight	Factor
#1	Scale 1	_____	_____
	Scale 2	_____	_____
#2	Scale 1	_____	_____
	Scale 2	_____	_____
#3	Scale 1	_____	_____
	Scale 2	_____	_____
#4	Scale 1	_____	_____
	Scale 2	_____	_____
#5	Scale 1	_____	_____
	Scale 2	_____	_____

MAIN MENU 7

CONTROL SCROLL	Scale #1	Scale #2
1. Start Out	_____	_____
2. Set Control Value	_____	_____
3. High Control Limit	_____	_____

4.	Low Control Limit	_____	_____
5.	Proportional Band	_____	_____
6.	Integral Time	_____	_____
7.	Deviation Time	_____	_____
8.	PEIC Time	_____	_____
9.	Setpoint Source	_____	_____
10.	Setpoint Units	_____	_____
11.	Setpoint Delay	_____	_____
12.	Percent of Ingredient	_____	_____
13.	Process Variable Damping	_____	_____
14.	PID+S Function	☐ Yes ☐ No	☐ Yes ☐ No
14A.	Regulation Delay	_____	_____
15.	Jump Cut-Off	☐ Yes ☐ No	☐ Yes ☐ No
15A.	Delay	_____	_____
15B.	Deviation	_____	_____
16.	Auto Tuning	☐ Yes ☐ No	☐ Yes ☐ No
17.	Controlled Variable	_____	_____
18.	Control Action	_____	_____
19.	Start Delay	_____ sec	_____ sec
SYSTEM SCROLL		Scale #1	Scale #2
1.	Max. Rate Capacity	_____	_____
2.	Min. Rate Capacity	_____	_____
3.	Start Refill Set	_____	_____

4.	End Refill Set	_____	_____
5.	Refill on Manual	☐ Yes ☐ No	☐ Yes ☐ No
6.	End Refill Time	_____ sec	_____ sec
7.	Refill Time-Out	_____ sec	_____ sec
8.	Density Compensation	_____	_____
9A.	Control Out Correct	_____	_____
9B.	Control Out Value	_____	_____
10.	Rate Internal	_____ sec	_____ sec
11.	Weight Constant	_____	_____

Calibration Report – Permanent Record

Scale _____

Date				
By				
Scale Capacity				
Calib. Constant				
R-Cal				
Static				
Calibration Mode				

Zero – As Found				
– As Left				
Span – As Found				
– As Left				

4

Chapter 4 Maintenance

Service and Repair

The maintenance information in this manual should meet your service needs. If problems occur that require technical assistance, please call (763)783-2500.

Thermo Fisher Scientific has a repair center located at our plant in Minneapolis, Minnesota. Contact our Repair Representative at (800) 445-3503 for assistance. To expedite your service request, please have your machine model and serial number available.

When returning parts for repair, please call (800) 445-3503 for a Return Material Authorization form.

Frequent Checkpoints

The feeder controller is a solid-state device, and as such, should require very little maintenance. The front panel can be wiped clean with a damp cloth, and if necessary, a mild detergent (never use abrasive cleaners, especially on the display window). As a preventive measure, check that all wires, plugs, and integrated circuits are tight in their connectors. Also keep the enclosure door tightly closed to prevent dirt infiltration.

More often than not, a quick visual inspection leads to the source of trouble. If a problem does develop, check the following before proceeding to more specific troubleshooting procedures.

1. Check Power

   A. Check that the two (2) Line Voltage Selector Switches are set to the correct line voltage.

   B. Check the fuses.

C. Check that the power switch is ON and that power is supplied to the unit.

2. Check Connections

A. Check that all terminations are secure.

B. Check that the Display Module and Keyboard connectors are firmly seated in their connectors.

C. Check that the Remote Counter and optional input/output modules are secure in their sockets.

D. Check that all Jumpers are in their correct position.

Troubleshooting

This feeder controller has built-in troubleshooting capabilities. A number of possible problems are automatically detected and screen messages are displayed. Also refer to the Diagnostics Test Scrolls in Main Menu 3.

Alarm Message

The ALARM message is assigned to the right hand soft key when an alarm is pending. The ALARM message and its LED flash at the same time.

The following screen is displayed when the right hand soft key is pressed.

```
ALARM          NEW
xxxxxxxxxxxxxxxxxxx
MM-DD-YYYY   HH:MM
RESET                    NEXT
```

The keyword "NEW" indicates an alarm that has not yet been acknowledged. When the operator presses the RESET key to clear the alarm, the alarm disappears only if the reason that caused the alarm to occur does not exist anymore. If the alarm is still pending, the keyword "ACK" is displayed instead of "NEW".

The third line shows the date and time only if the optional COMM board is installed.

The NEXT key is used to scroll between the pending alarms. The string "xxxxxxxxxxxxxxxxxxxx" represents one of the following alarm conditions.

Alarms List

1 - Clock Fail

The system has detected a failure on the clock calendar circuit. This alarm only occurs if the optional COMM board is installed.

- Check the COMM board to see if it is properly inserted.
- Replace the COMM board.

2/4 - Load Cell Fail S#

S# identifies the scale if more scales are defined. The system has detected an error on the load cell signal.

- Check the load cell connections.
- Check the load cell(s).

5 - RAM Fail

The system has detected an error on the RAM checksum during the internal periodical test. The RAM (Random Access Memory) is used to store variables and set up data.

- Replace the CPU board.

6 - ROM Fail

The system has detected an error on the ROM checksum during the internal periodical test. The ROM (Read Only Memory) is used to store the program.

- Replace the CPU board.

7/9 - High Weight S#

S# identifies the scale if more than one scale is defined. Actual weight is higher than high weight threshold.

10/12 - Low Weight S#

S# identifies the scale if more than one scale is defined. Actual weight is lower than low weight threshold.

13/15 - High Rate S#

S# identifies the scale if more than one scale is defined. Actual rate is higher than high rate threshold.

16/18 - Low Rate S#

S# identifies the scale if more than one scale is defined. Actual rate is lower than low rate threshold.

19 - Warm Start

The system has detected a power loss condition, or power was removed for an undefined period of time.

20 - Cold Start

The system has detected the loss of the set up data after power was removed. The instrument needs to be set up and calibrated.

- Replace either the mother board or the battery.

NOTE. The message COLD START never appears on the screen. This is because a Cold Start forces a start up procedure to be executed, and the alarm itself is cleared after the set up is completed. However, the alarm LED and the digital output will be showing an alarm during the initial set up procedure.

21 - Power Down During Calibrate

When the system is powered off while a calibration sequence is in progress, the scale may not be properly calibrated.

- Check calibration.

22/24 - Calib Time S#

S# identifies the scale if more than one scale is defined. If a calibration check time period is entered and the time expires, this alarm occurs. The purpose is to remind the operator that the calibration has not been checked for a considerably long period of time.

- Check calibration.

25 - Extern Alarm 1

Digital inputs can be programmed to detect external alarm conditions such as emergency switches, max level switches or other. This alarm is associated to the external alarm #1.

- Check external alarm #1.

26 - Extern Alarm 2

- Check external alarm #2.

27 - Extern Alarm 3

- Check external alarm #3.

28/33 - Hardware Configuration Changed

When a new board is installed or an old board removed, this message appears. Refer to Section on Normal Power On.

34 - BCD Overflow

This message is only displayed if the optional BCD output board is installed. If the variable to be converted in the BCD format has more than 4 digits, the alarm is generated.

- Check the size of variables and the BCD data setup.

35 - Math Error

A divide by zero or overflow error is encountered during internal calculations. This message indicates some abnormal dimensional parameter is entered in setup.

- Check setup data.

36 - Printer Error

This message is displayed if the system has data to print and the printer is disconnected or the paper feed is empty.

37 - Communication Error

This message is only displayed if the optional COMM board is installed. It indicates that a time out or handshake error is detected during a data transfer on the COMM line.

- Check the COMM line connections.
- Check the COMM line setup data.

38/40 - High Pos Dev S#

S# identifies the scale if more scales are defined. Control error (*) is higher than High positive deviation set.

(*) Control error is defined as the difference between the process variable and the setpoint.

41/43 - HHigh Pos Dev S#

S# identifies the scale if more scales are defined. Control error is higher than High high positive deviation set.

44/46 - High Neg Dev S#

S# identifies the scale if more scales are defined. Control error is higher than high negative deviation set.

47/49 - HHigh Neg Dev S#

S# identifies the scale if more scales are defined. Control output value is higher than High high negative deviation set.

50 - Refill Timeout S#

S# identifies the scale if more scales are defined. Refill is taking a time higher than maximum refill time.

51/53 - Overflow Totalizer S#

S# identifies the scale if more scales are defined. This message indicates that the output pulse generator for the remote mechanical totalizer has reached an overflow condition.

The rate may be too high or the remote pulses divider has been set too small.

- Check the rate.
- Check and eventually increase the pulses divider.

This message is also displayed if the MASTER TOTAL rolls over.

59. Allen-Bradley Remote I/O COMM Error

This message is displayed if communication is interrupted. The green LED on the A-B RI/O board will be flashing. The alarm does not come on if communication has never started.

60. PROFIBUS-DP COMM Error

This message is only displayed if the optional PROFIBUS board is installed. The following two conditions activate the alarm.

a. If the Siemens SPC3 controller installed on the PROFIBUS interface board does not recognize any successful data transfer within the watch dog timer interval.
b. If the received data contains errors (value overlaps limits, register number does not exist, group number does not exist).

Micro-Tech Feeder Controller Cold Start

It may be necessary to cold start the Micro-Tech 2000 in the event the software becomes corrupted. You have the option of installing the factory default constants or simply returning the Micro-Tech 2000 to its previous running state.

Steps required to cold start:

```
Install Factory
   Defaults ?

NO                YES
```

Pressing NO returns the Micro-Tech 2000 to the RUN mode.
If YES is pressed, the following screen appears.

```
            -  MEMORY ERASED   -
Choose the language
key to continue to
ESP               USA
```

When the above screen appears, all field entry data has been replaced by the factory default constants. Proceed to Initial Setup Procedure.

NOTE. If the software corruption was catastrophic and the memory would not erase in the above step, do the following:

a. Press and hold in the LEFT HAND ARROW key and the CLEAR key. While holding in both keys, cycle line power. In the event the MEMORY ERASED screen does not appear, consult the Factory.

Internal Test Procedure

Pressing START on the screen (located in Main Menu 3) enacts a self-test of the internal microprocessor.

```
- TEST SCROLL 2 -
Internal test of
microprocessor.
START
```

Password: Service

After START is pressed, the following screens are displayed in sequence.

```
- TEST SCROLL 2A -
Testing ROM
Test PASSED
```

```
- TEST SCROLL 2B -
Testing RAM
Test PASSED
```

```
- TEST SCROLL 2C -
Testing E2PROM
Test PASSED
```

Only if Audit Trail Option is installed

The message "Test PASSED" is displayed if the test runs correctly. If something wrong is detected, then the message "Test FAILED" is displayed, and the soft key CONTINUE is shown.
The operator has to press the key to go on to the next test.

If the internal test has failed, call Thermo Fisher Scientific's Customer Service Department.

Load Cell Excitation and signal Voltage (Field Mount)

1. Measure excitation voltage across terminal 21 negative and 20 positive in the scale junction box. This should be 10 VDC +/- 5%.

2. If the excitation voltage is incorrect, then measure the excitation voltage in the Feeder Controller across terminal TB9-9 negative and TB9-10 positive. This should be 10 VDC +/- 5%.

3. Measure DC millivolt signal voltage across terminal 22 positive and 23 negative in the scale junction box. This should be within 0-30 millivolts DC (3mV/V load cell).

4. Measure DC millivolt signal voltage across terminal TB9-12 positive and TB9-11 negative in the Feeder Controller. This should be the same as Step 3 above.

5. The millivolt output is in direct relation to weight applied. As weight is increased, output should increase.

Load Cell Excitation and Signal Voltage (Panel Mount)

1. Measure excitation voltage across terminal 21 negative and 20 positive in the scale junction box. This should be 10 VDC +/- 5%.

2. If the excitation voltage is incorrect, then measure the excitation voltage in the Feeder Controller across terminal TB3-4 negative and TB3-3 positive. This should be 10 VDC +/- 5%.

3. Measure DC millivolt signal voltage across terminal 22 positive and 23 negative in the scale junction box. This should be within 0-30 millivolts DC (3mV/V load cell).

4. Measure DC millivolt signal voltage across terminal TB3-7 positive and TB3-8 negative in the Feeder Controller. This should be the same as Step 3 above.

5. The millivolt output is in direct relation to weight applied. As weight is increased, output should increase.

Resetting Master Total Procedure

Steps required to reset master total or to reset remote counter overflow are given below.

A. If No Password is Installed

1. Select Main Menu 3.
2. Press DIAG soft key and scroll down to the Service Password screen.
3. Type in a password (Example: 123) and press ENTER.
4. Re-enter the password and press ENTER.
5. Select Main Menu 3.
6. Press PROT scroll and press PROT soft key.
7. Press the NONE soft key.
8. Type in password 7832500 and press ENTER. The protection level should be RAMSEY.
9. Press the TOTAL key on the touch panel. Scroll up or down if needed to reach the Master Total screen.
10. Press the RESET soft key and answer YES to Reset Master Total?

11. Select Main Menu 3. Press the DIAG soft key and scroll down to Service Password.
12. Press ENTER twice, erasing the password installed in Step 3.
13. Press the RUN key to return to normal operation.

B. If Password is Already Active

1. Select Main Menu 3.
2. Press the PROT scroll and press the PROT soft key.
3. Press the NONE soft key.
4. Type in password 7832500 and press ENTER. The protection level should be RAMSEY.
5. Press the TOTAL key on the touch panel. Scroll up or down if needed to reach the Master Total screen.
6. Press the RESET soft key and answer YES to Reset Master Total?
7. Select Main Menu 3.
8. Press the PROT scroll and choose the password level desired.

To Remove a Forgotten Password

1. Select Main Menu 3.
2. Press the PROTECT scroll and press the PROT soft key.
3. Press the NONE soft key.
4. Type in password 7832500 and press ENTER. The protection level should be RAMSEY.
5. Press NONE.
6. Select Main Menu 3.
7. Press the DIAG soft key and scroll down to Service Password.
8. Press ENTER twice. The display should respond with New Password Acquired.
9. Scroll down to Operator Password. Press ENTER twice. The display should respond with New Password Acquired.
10. Select Main Menu 3. The PROT soft key should not appear, indicating all passwords have been erased. If PROT should appear, repeat Steps 1 through 9.
11. See Manual Section for entering new passwords.

Lithium Battery Replacement

The Micro-Tech volatile memory backup battery can be replaced without any special tools. See Figure 4-1 for battery location on the mother board.

1. Record all configuration, setup and calibration data before removing battery. All information is lost when the battery is removed.
2. Turn the Micro-Tech power off at the mains.
3. Remove the battery from its compression socket.
4. Observe the polarity markings on the battery socket base before inserting the new battery. Battery type = Lithium, 3.0 V, 1.2 AH, 2/3 A., Thermo Fisher Scientific Part Number 037188.

5. Insert battery.
6. Restore power to the Micro-Tech.
7. Cold start the Micro-Tech. See cold start procedure.
8. Re-enter all data recorded in Step 1.

CAUTION. DANGER OF EXPLOSION IF BATTERY IS INCORRECTLY REPLACED.

Replace only with same or equivalent type recommended by Thermo Fisher Scientific. Dispose of used battery according to manufacturer's instruction on battery or return to Thermo Fisher Scientific.

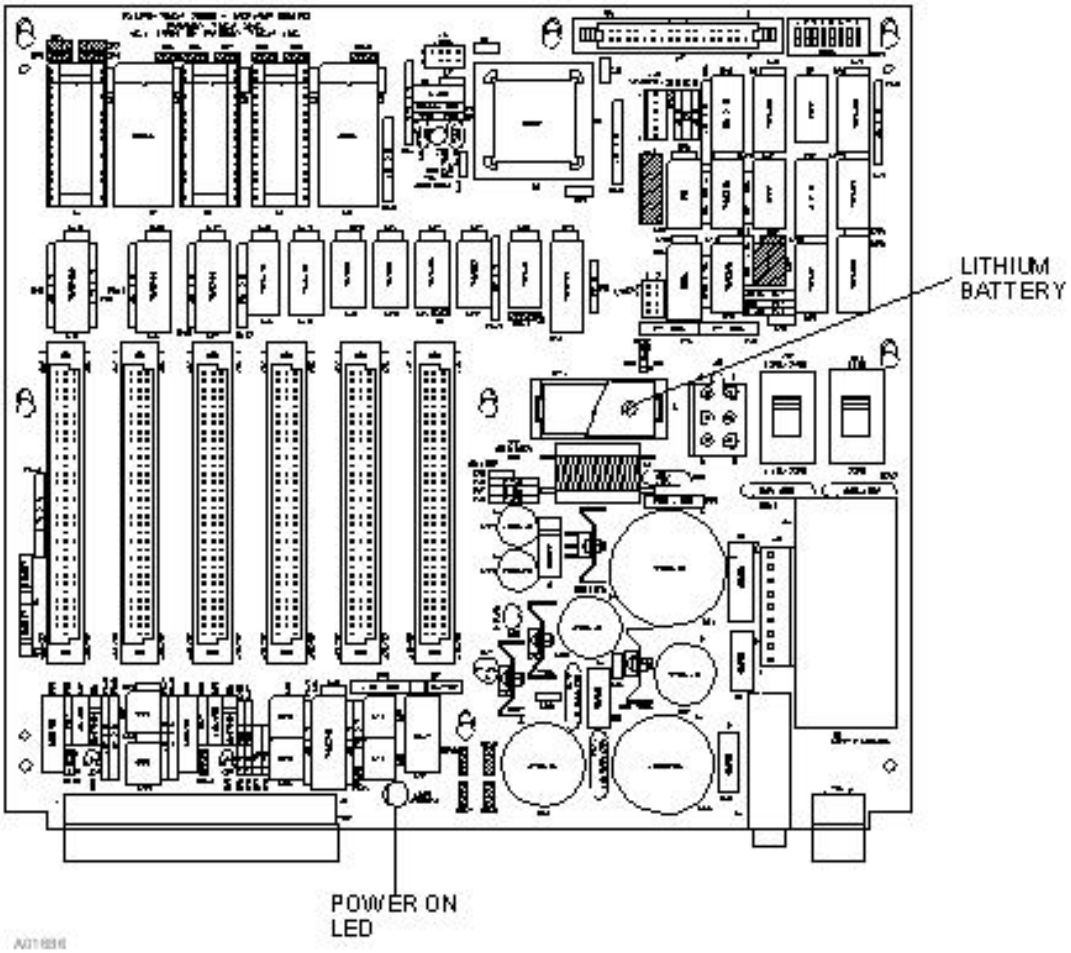

Figure 4-1. Model 2104 Mother Board

Disposal of Hazardous Waste

Disposal of Lithium batteries and soldered printed circuit boards should be in accordance with your local Hazardous Waste Policy.

As an alternative, you may return product supplied by Thermo Fisher Scientific, freight prepaid for disposal. Contact our repair department for a Return Authorization Number before shipping any product for disposal.

Cleaning Instructions

The Micro-Tech 2104 Feeder Controller is a solid-state device, and as such, should require very little maintenance. The front panel can be wiped clean with a damp cloth, and if necessary, a mild detergent (never use abrasive cleaners, especially on the display window). As a preventive measure, check that all wires, plugs, and integrated circuits are tight in their connectors. Also keep the enclosure door tightly closed to prevent dirt infiltration.

5

Chapter 5 Replacement Parts

General

This chapter gives information on how to order replacement parts for your Micro-Tech 2104 Feeder Controller.

Order Information

For faster service when ordering parts, fax or telephone Thermo Fisher Scientific Parts Department.

The recommended procedure for ordering parts is as follows:

1. Determine the broken or faulty part(s).
2. Locate the part(s) in the parts list given.
3. Find the part number(s) for the item(s) needed and determine the quantity you require.
4. Write or telephone:

   Thermo Fisher Scientific
   Customer Service Department
   501 90th Ave. NW
   Minneapolis, MN 55433
   Fax: (763)783-2525

   Repair and Returns. Call for a Return Material Authorization number/form: 1-800-445-3503

   Normal Customer Service hours are 8:00 a.m. to 4:30 p.m., Central Time, Monday through Friday.

5. With your order, list the following information:

   Feeder Controller model and serial number
   Purchase order number

Date required
Method of shipment preferred
List of parts, including part number, description and quantity

Your parts order will be handled as expeditiously as possible.

Parts List

MICRO-TECH™ 2000 Model 2104 Feeder Controller

EQUIPMENT	PART NUMBER
Chassis Assembly, Panel Mount	050179
Chassis Assembly, Field Mount	051316
PCBA, Mother Board	051322
PCBA, A/D Plant, Single Channel	046409
PCBA, A/D Plant, Dual Channel	048985
PCBA, Analog Output (1 out)	071637
PCBA, Analog Output (2 in/2 out)	071636
PCBA, DIO (4 in/16 out)	046841
PCBA, DIO (16 in/4 out)	046844
PCBA, COMM "A" Select one only RS-232C RS-485, std. (point to point) RS-485, multi-drop 20 mA (digital) current loop	046853
PCBA, LED Assembly	046847
PCBA, Display Assembly	046860
PCBA, Field Terminal Entry	047572
PCBA, Load Out DIO (4 in/16 out)	049475
PCBA, Load Out DIO (16 in/4 out)	049476
PCBA, PROFIBUS-DP	056713
Touch Panel Model 2104	047077
Fuse, Slo-Blo, .5 Amp (F1 220V) (Type T)	001366
Fuse, Slo-Blo, 1.0 Amp (F1 110V) (Type T)	002443
Fuse, Fast-Blo, 4.0 Amp (FT Board) (Type T)	037287
Battery, Lithium, 3.0 V, 1.2 AH, 2/3 A	037188
Transformer, Power	046863
Module, Power Input 180-240 VAC	047646
Module, Power Input 90-120 VAC	047575
Module, Power Input 10-32 VDC	048162
Module, Power Output 24-240 VAC	046814
Module, Power Output 5-60 VDC	046815

Phone/Fax Contacts for Thermo Fisher Scientific Offices

Australia
+61 (0) 8 8208-8200
+61 (0) 8 8234-3772 fax
service.auadl@thermofisher.com

Brazil
+55-11-2367-2192
+55-11-2367-2192 fax

Canada
(See United States)

Chile
+56 (2) 2378 5080
+56 (2) 2370 1082 fax
ventas.Bulk.LA@thermofisher.com

China - Beijing
+86 10-8419-3588
+86 10-8419-3580 fax

Germany
+49 (0) 208-824930
+49 (0) 208-852310 fax
service.oberhausen@thermofisher.com
sales.oberhausen@thermofisher.com

India - Mumbai
+91-22-4157-8800
+91-22-4157-8801 fax
sales.process.in@thermofisher.com

Italy
+39 02-950590.1 main
+39 02-950590.55 sales
+39 02-953200.15 fax
sales.mi.ramsey.it@thermofisher.com

Mexico
+52 55 1253-9411
+52 55 5300-0876 fax
email.mxnau.sales@thermofisher.com

South Africa
+27 (0) 11-776-0000
+27 (0) 11-822-3982 fax
sales@thermo.co.za

Spain
+34 91-484-5965
+34 91-484-3597 fax
commercial.pid.esmad@thermofisher.com

United States & Canada
+1 (800) 445-3503
+1 (763) 783-2525 fax
service.bulk.us@thermofisher.com
parts.bulk.us@thermofisher.com
sales.bulk.us@thermofisher.com

Appendix A System Design Information

Flow Rate Considerations

In a loss-of-weight system, the flow rate measurement is done by making the difference between two subsequent weight measurements. The time between the two measurements has to be short enough to keep the response time of the system within an acceptable value.

As a consequence, the difference between the two weights is a very low value and it is strongly affected by any noise on the weight signal which may be produced by vibrations of the mechanical parts.

The accuracy and stability of the flow rate measurements gets better under the following conditions:

- increase of the speed variation of the weight signal by reducing the hopper discharge time and increasing the ratio between net weight and load cell capacity.
- reduction of the weight signal noise caused by mechanical vibrations by increasing the ruggedness of the mechanical structure supporting the weight hopper.

To handle the above problems, the feeder controller provides various averaging and damping of the signals.

Each of the two weight values used to calculate the weight difference is the average of a number of weight measurements; this number is called "WEIGHT CONSTANT" (W) and is adjustable from 2 to 16.

The time within two subsequent weight measurements is also adjustable and is called "RATE INTERVAL" (T) (values adjustable from 0.1 to 6.0 seconds).

The product of W times T is called "RATE FACTOR" (F) and defines the difference in time within the two weight values used to calculate the weight difference.

However the program calculates and updates the flow rate value at each T time by using the values memorized on a number of memories equal to "W" shifted each one from the other of "T" time.

This means that after a step variation of actual flow rate the time required for the calculated flow rate to represent 100% of the variation is equal to F with linear change from old to new value. See Figure A-1.

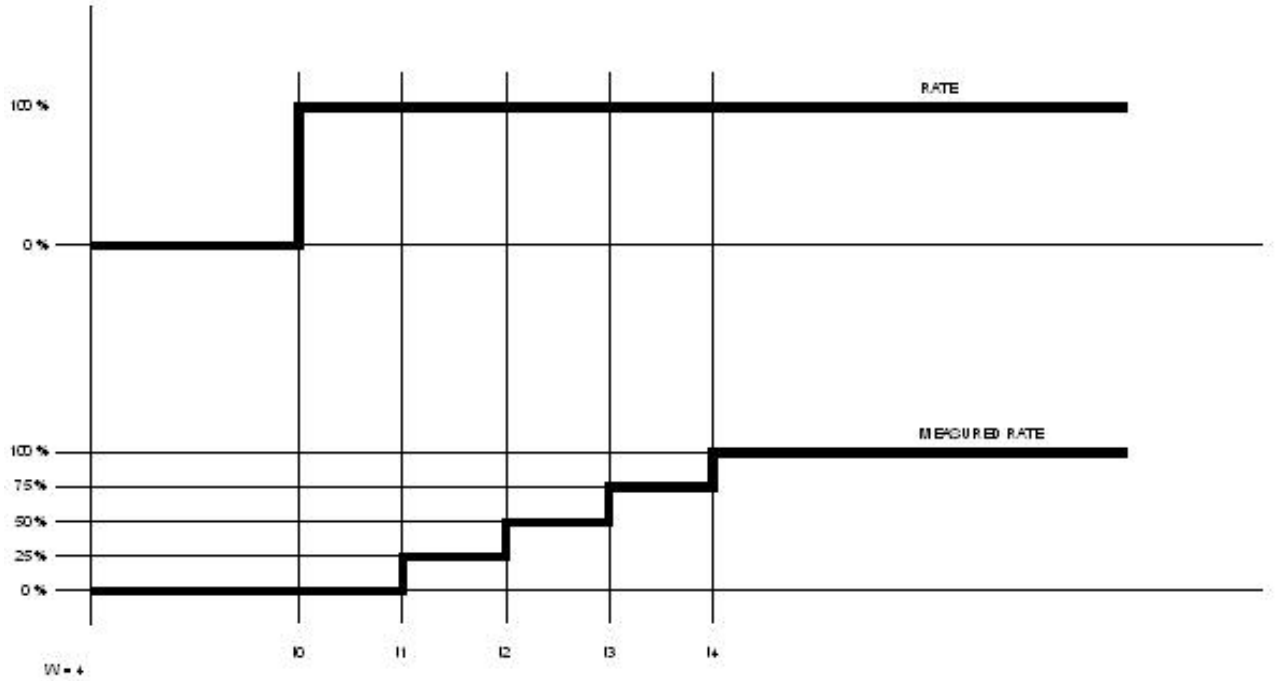

Figure A-1. Loss of Weight Step Response

A damping action (asymptotic curve) can also be applied to the calculated flow rate value for additional filtering to compensate plant vibrations. On sizing a loss in weight system, extreme care should be taken to maintain the full scale flow within the acceptable limits to avoid running into unstable operating conditions.

The minimum acceptable flow rate is given by the following formulas:

$$QFS_{min} = \frac{CTC}{WORK_{HOURS}}$$

$$F > \frac{3600 * WORK_{HOURS} * 100}{RESOLUTION * RATE_{ACCURACY}}$$

where:

QFS_min	[kg/h]	Minimum full scale rate
WORK_HOURS	[h]	Maximum number of working hours without refilling
RATE_ACCURACY	[%]	Required accuracy for rate
RESOLUTION	[counts]	Nominal resolution of the A/D converter at 100% of load cell
CTC	[kg]	Total load cell capacity

$$QFS_{max} = \frac{H_{LEV} - L_{LEV}}{100} * \frac{CAPACITY}{WORK_{HOURS}}$$

$$F < 3600 * WORK_{HOURS} * \frac{RATE_{ACCURACY}}{100}$$

where:

QFS_max	[kg/h]	Maximum full scale rate
H_LEV	[%]	High Weight set point (stops refilling)
L_LEV	[%]	Low Weight set point (starts refilling)
CAPACITY	[kg]	Full scale weight

The system must be designed so that a value of parameter F can be determined, which satisfies both conditions.

In addition, discharge times larger than 3 hours have to be considered critical, because the effect of little vibrations would become appreciable to an extent that may compromise the functionality of the system.

Also, the quality of the feeding machine must be taken in consideration. Low rates mean very small amounts of material to be moved, so the feeding machine must be able to modulate the flow of material in the smoothest way, avoiding blocks of material or temporary absence of it.

Appendix B Digital Input/Output

General

The integrator has provision for up to 24 programmable digital inputs and 24 programmable digital outputs. Located on the Mother Board are two speed inputs, two programmable inputs, three programmable outputs, and one non-programmable Micro-Tech hardware fault output. One speed input is defaulted to a programmable input unless the belt slip option is installed.

Optional DIO boards can be added if additional I/O is required.

Mother Board Digital I/O

Digital Inputs

1. (2) speed and (2) programmable digital (DC) inputs (Figure B-1).
   - Optically isolated
   - Powered by internal +24 V DIO supply, 6 mA maximum
   - Cable Length: 150 ohm maximum. (7500 ft. of 20 AWG)

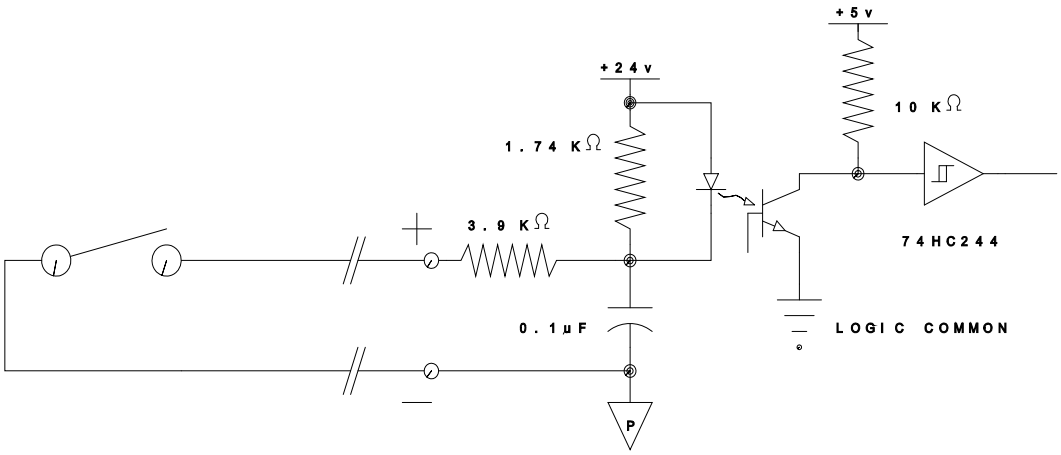

A00698

Figure B-1. General Purpose Digital Inputs

Digital Outputs

1. (3) programmable and (1) non-programmable failure digital open collector outputs (Figure B-2).
   - Able to drive TTL, CMOS, or relay solenoids
   - Current sinking socketed drivers
   - +24 VDC internal supply, 100 mA DC maximum per output
   - Failure output is “fail safe”, turns off under fault condition

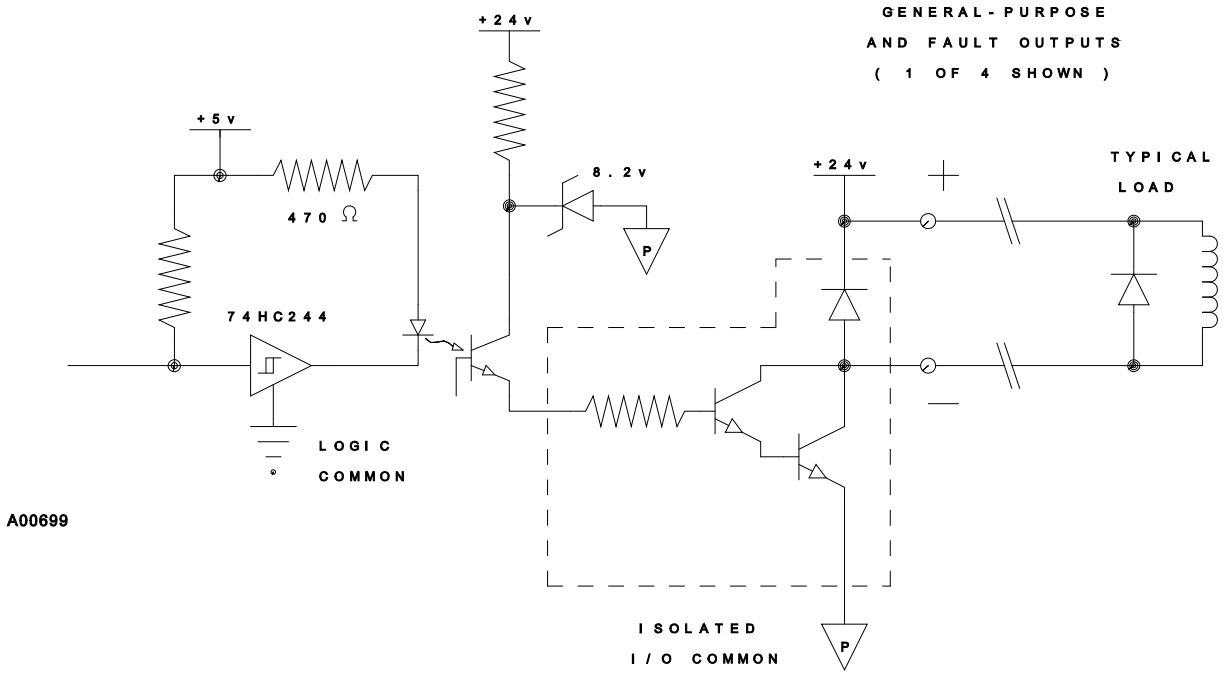

Figure B-2. General Purpose Fault Output

Digital Input/Output Board Configuration

In addition to the programmable digital inputs and outputs on the Mother board, optional Digital I/O (DIO) expansion boards can be added. Available boards are DIO input board 16 inputs/4 outputs, output board 16 outputs/4 inputs or 20 inputs/20 outputs by adding both boards.

Both DIO boards provide isolated contact closure inputs and 24 volt current sinking (default) or current sourcing (consult Factory) isolated outputs. The DIO input board connector J16 is a male 25 pin sub-miniature D connector and the DIO output board connector J15 is a female connector.

Internal or external 24 VDC power for the DIO boards is controlled by selectable jumpers OP1 and OP2 located on the lower right hand side of the DIO boards. All inputs and outputs use the same selected power supply. See table below for jumper positions.

JUMPERS			
POWER SOURCE	OP1	OP2	
Internal	“A”	“A”	[Default]
External	“B”	“B”	

The isolated contact closure inputs are activated by completing the circuit from the input to the negative side of the 24 VDC supply. Approximately 6 mA of current flows out of each input during contact closure.

The outputs of the DIO boards use 2803 current sinking (default) type IC’s. The output IC’s are installed in sockets to allow replacing the output IC only, rather than the board if the IC is damaged.

The output IC’s can be replaced with 2981 type IC’s for current sourcing applications. Wire jumpers W1 through W4 must be relocated for current sourcing. In most cases, it is recommended that the boards be returned to the factory for converting from current sinking (default) to current sourcing. See table below for jumper positions.

JUMPERS					
CURRENT	W1	W2	W3	W4	
Sinking	“Yes”	“No”	“Yes”	“No”	[Default]
Sourcing	“No”	“Yes”	“No”	“Yes”	

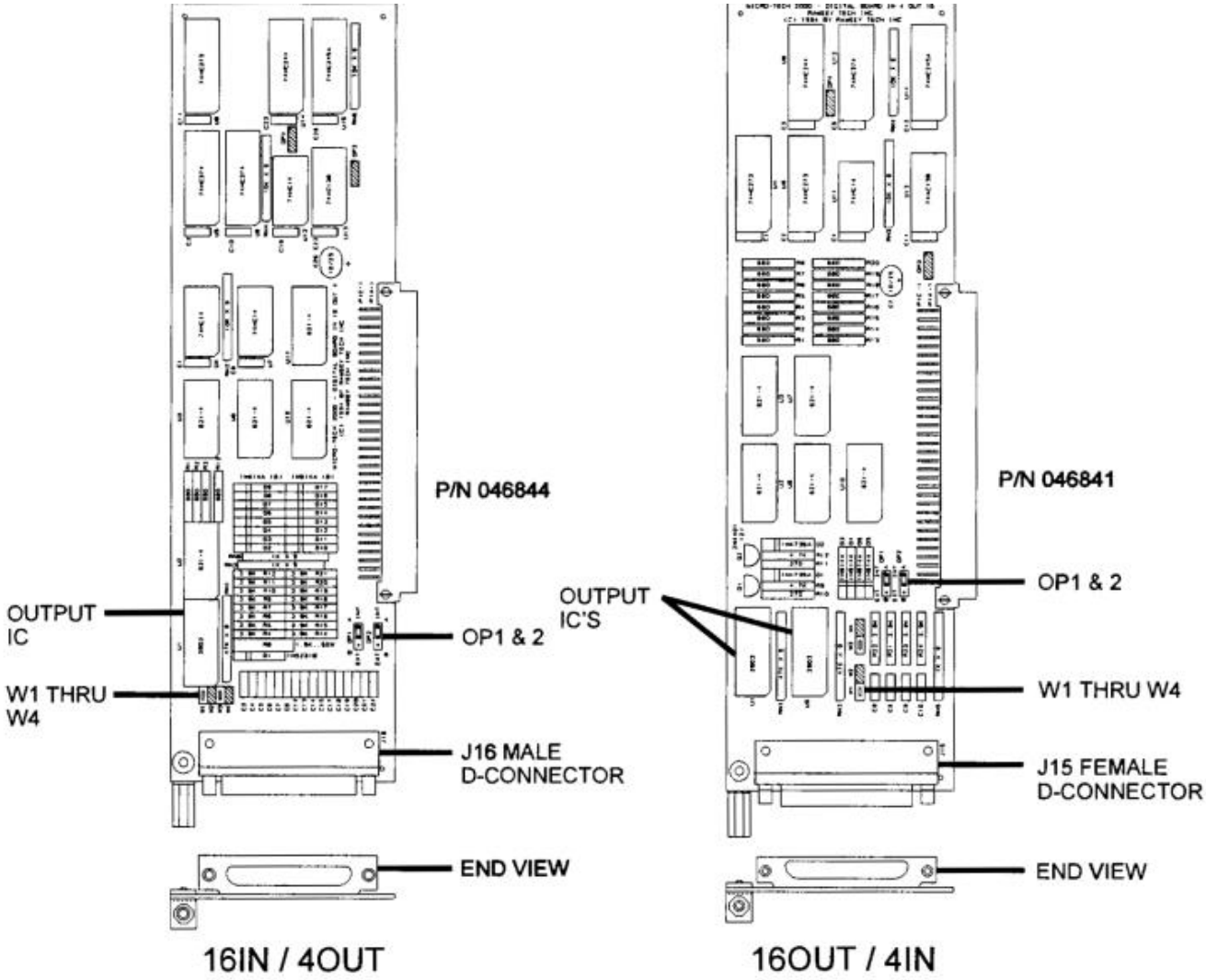

Figure B-3. Digital Input/Output Boards

16 In/4 Out DIP Board Specification (Figure B-4)

1. (16) programmable inputs
2. (4) programmable outputs
3. Connector

   25 pin D connector (male). Connector is interchangeable with a 20 or 22 pin subminiature D connector dimensionally complying with MIL-C-24308.

4 In/16 Out DIO Board Specification (Figure B-4)

1. (4) programmable inputs
2. (16) programmable outputs
3. Connector

   25 pin D connector (female). Connector is interchangeable with a 20 or 22 pin subminiature D connector dimensionally complying with MIL-C-24308.

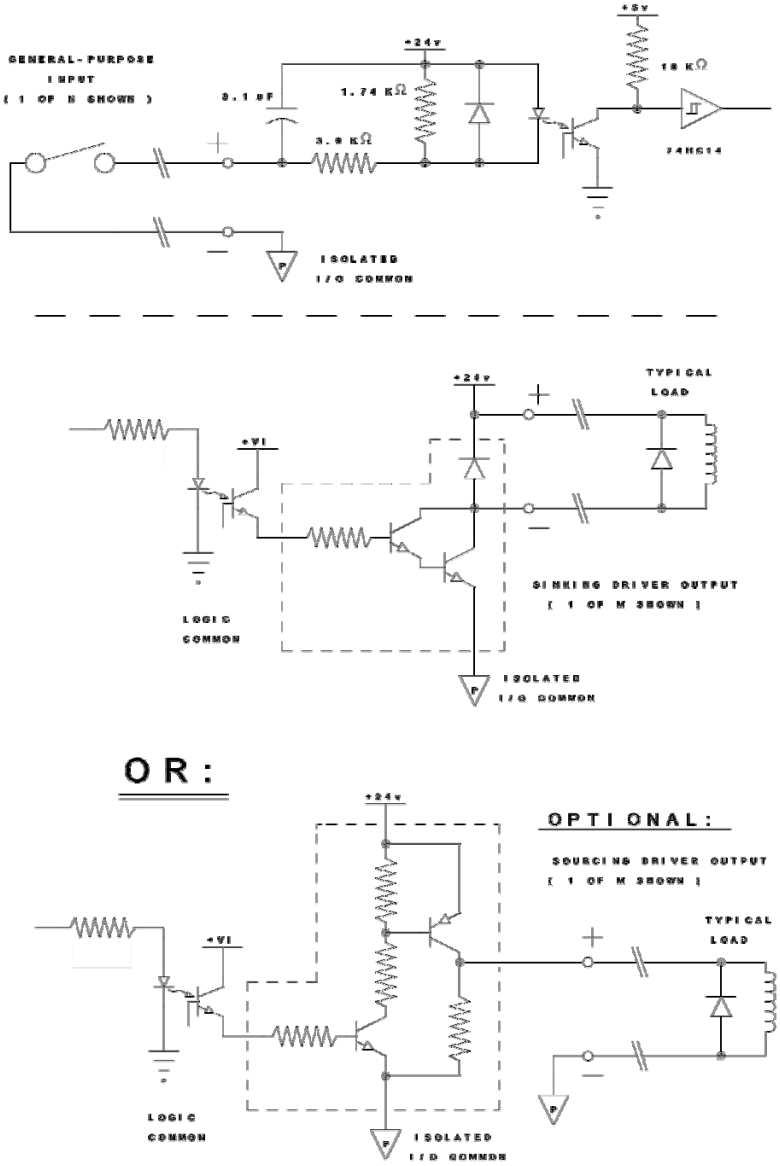

Figure B-4. Digital Inputs/Outputs

BCD Input Option

Load sizes for load out or batching applications can be remotely entered by BCD. An optional Load Out input output board is required.

See Figure B-5 for wiring.

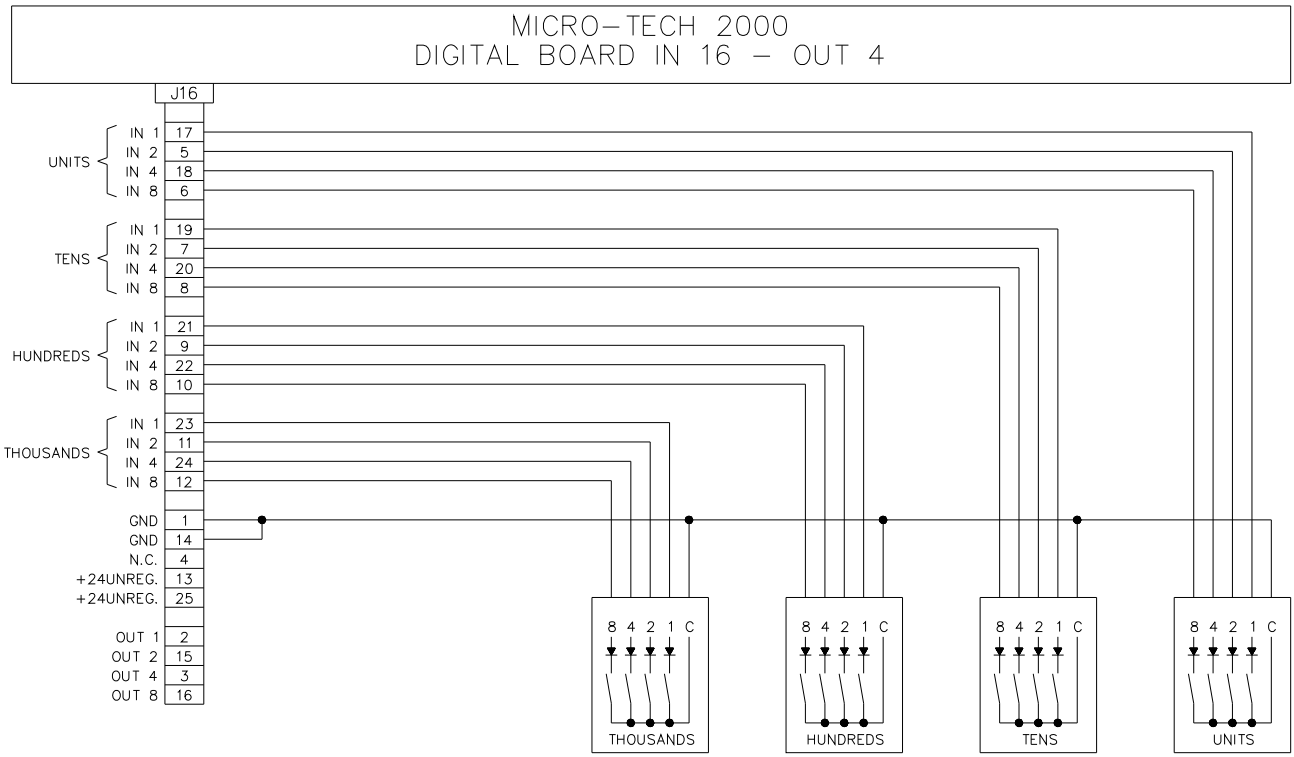

Figure B-5. BCD Input

C

Appendix C MT 2104 Menus

Menu Displays

The feeder controller is a menu driven machine that allows the operator to access all setup, test and calibration parameters. Main Menu screens 1 through 7 can be accessed at anytime by pressing the MENU key until the desired menu screen is displayed. Menu scrolls may be selected by pressing the soft key directly below the desired scroll, and then using the Up/Down scroll key.

If the feeder controller is password protected, the appropriate password must be entered prior to making changes or performing routine calibration. Menus may be viewed without entering a password, but no entries are allowed unless the password is entered.

Optional scrolls are only available if the available option has been installed. The following screens are activated by the MENU key.

```
                - MAIN MENU 1 -
Press MENU for more
CAL        CAL
ZERO       SPAN       PRINT
```

```
                - MAIN MENU 2 -
Press MENU for more
               SCALE      CALIB
DISPLAY        DATA       DATA
```

```
                - MAIN MENU 3 -
Press MENU for more

PROT       DIAG       TEST
```

```
                - MAIN MENU 4 -
Press MENU for more
I/O          ALARMS
DEFINE       DEFINE        BATCH
```

```
                - MAIN MENU 5 -
Press MENU for more

COMM A       COMM B        PRINT
```

*Can be AB I/O or Pro DP

```
                - MAIN MENU 6 -
Press MENU for more
AUDIT
TRAIL        LINEAR
```

```
                - MAIN MENU 7 -
Press MENU for more

CONTROL SYSTEM
```

Main Menu 1

Main Menu 1 contains the Calibration Menu. Menu 1 is selected by pressing the MENU key until Main Menu 1 appears. Desired calibration scrolls are selected by pressing the soft keys directly below the desired scroll.

```
                - MAIN MENU 1 -
Press MENU for more
CAL          CAL
ZERO         SPAN          PRINT
```

PRINT message is assigned to the right hand soft key only if more than one scale is defined and a COMM A board is installed.

Zero Calibration Scroll

See Zero Calibration Scroll in Chapter 3.

Span Calibration

See Span Calibration in Chapter 3.

Main Menu 2

Main Menu 2 contains the setup and configuration menus. Main Menu 2 is selected by pressing the MENU key until Main Menu 2 appears. Setup scrolls are selected by pressing the key directly below the desired scroll.

```
                - MAIN MENU 2 -
Press MENU for more
              SCALE       CALIB
DISPLAY       DATA        DATA
```

Display Scroll

1. Defining Measure Units

Measure units can be individually selected. The operator must first decide if the English or Metric units will be used, or a combination of both.

Press the ENTER soft key to accept the default unit, or CHOICES soft key to scroll selections. Press ENTER to confirm your selection. Scroll down.

```
        - DISPLAY SCROLL 1-
Measure units
> English <
CHOICE     ENTER
```

Password: Service

If USA or ENG: Default: ENGLISH
If other language: Default: METRIC
Selections: ENGLISH, METRIC, MIXED

The rate is displayed according to the units selected here.

Press ENTER soft key to accept the default unit, or CHOICES soft key to scroll selections. Press ENTER to confirm your selection. Scroll down.

```
        - DISPLAY SCROLL 2 -
Rate Units
> Lb/h <
CHOICE     ENTER
```

Password: Service

If ENGLISH:	Default:	LB/H
	Selections:	TPH, LTPH, LB/H, T/M, LT/M, LB/M
If METRIC:	Default:	KG/H
	Selections:	T/H, KG/H, T/M, KG/M
If MIXED:	Default:	POUNDS
	Selections:	T/H, KG/H, T/M, KG/M, TPH, LTPH, LB/H, T/M, LT/M, LB/M

The weights are displayed according to the units selected here.

Press ENTER soft key to accept the default unit, or CHOICES soft key to scroll selections. Press ENTER to confirm your selection. Scroll down.

```
        - DISPLAY SCROLL 3 -
Weight Units
> pounds <
CHOICE     ENTER
```

Password: Service

If ENGLISH:	Default:	POUNDS
	Selections:	PERC %, POUNDS, TONS, LTONS
If METRIC:	Default:	KG
	Selections:	PERC %, KG, TONNES
If MIXED:	Default:	POUNDS
	Selections:	PERC %, KG, TONNES, POUNDS, TONS, LTONS

Press ENTER soft key to accept the default unit, or CHOICES soft key to scroll selections. Press ENTER to confirm your selection. Scroll down.

```
        -  DISPLAY SCROLL 4  -
Total Units
> tons <
CHOICE     ENTER
```

Password: Service

If ENGLISH:	Default:	TONS
	Selections:	TONS, LTONS, POUNDS
If METRIC:	Default:	TONNES
	Selections:	TONNES, KG
If MIXED:	Default:	TONS
	Selections:	TONS, LTONS, POUNDS, TONNES, KG

Press ENTER soft key to accept the default unit, or CHOICES soft key to scroll selections. Press ENTER to confirm your selection. Scroll down.

2. Defining the Language

The Micro Tech 2000 is a dual language instrument. English (ENG or USA) is always the first language. The second can be one from the following list. Press DOWN SCROLL key.

```
      - DISPLAY SCROLL 5 -
Language
> USA <
CHOICE    ENTER
```

Password: Service

Default: USA
Selections: USA, ESP

3. Setting Time and Date Mode

This section applies only if COM board is installed. The operator defines the format for displaying and printing time and date.

```
      - DISPLAY SCROLL 6 -
Time
> am/pm h <
CHOICE    ENTER
```

Password: Service

If USA or English: Default: am/pm
If other language: Default: 24 h
Selections: am/pm, 24 h

```
      - DISPLAY SCROLL 7-
Date
> MM-DD YYYY <
CHOICE    ENTER
```

Password: Service

If USA:	Default:	MM DD YYYY
If other language:	Default:	DD MM YYYY
	Selections:	DD MM YYYY, MM DD YYYY, YYYY MM DD

4. Setting Line 2 and 3 of the RUN Menu

The RUN MENU can be configured to display on line 2 and/or 3 either weight, master total, reset total, date and time and a graphic indication of the net weight.

```
        - DISPLAY SCROLL 8 -
RUN display line 2
> Weight <
CHOICE     ENTER        SCALE#
```

Password: Operator

Default:	WEIGHT
Selections:	NO DISPLAY, WEIGHT, RESET TOT, MASTER TOT, RATE, DATE/TIME (Only if COMM board installed), BARGRAPH

```
        - DISPLAY SCROLL 9 -
RUN display line 3
> No Display <
CHOICE     ENTER        SCALE#
```

Password: Operator

Default:	NO DISPLAY
Selections:	NO DISPLAY, WEIGHT, RESET TOT, MASTER TOT, RATE, DATE/TIME (Only if COMM board installed), BARGRAPH

5. Setting Division for Rate Display

Define the division used to display the rate value.

```
        - DISPLAY SCROLL 10-
Display rate
divis. > 0.1 <
CHOICE     ENTER        SCALE#
```

Password: Operator

Default: 0.1
Selections: 0.1, 0.2, 0.5, 1, 2, 5, 10, 20, 50, 0.01, 0.02, 0.05, 0.001, 0.002, 0.005

6. Setting Damping Factors for the Display

The process variables when displayed on the screen can be damped by a programmable factor, to filter out variations that can be introduced by mechanical vibrations. To tune a damping filter, enter the number of seconds corresponding to the desired time constant. If, for example, 10 seconds is entered, the process variable reaches the stability after a step change in 10 seconds.

```
        - DISPLAY SCROLL 11-
Display rate
damping  10 sec
ENTER      SCALE #
```

Password: Operator

Default: 10 sec
Min: 0 sec
Max: 400 sec

```
        - DISPLAY SCROLL 12-
Display weight
damping 4 sec
ENTER      SCALE#
```

Password: Operator

Default: 4 sec
Min: 0 sec
Max: 400 sec

7. Enable ALTERNATE Function on RUN Scroll

When two scales are enabled, the operator can display one scale or another by means of the SCALE# key.

The ALTERNATE function allows the operator to automatically change scales without pressing the SCALE # key at predefined intervals of time.

A number of seconds greater than zero enables the function. If only one scale is enabled, this scroll is not displayed.

```
        - DISPLAY SCROLL 13-
Alternate scale in
RUN          _______ sec
ENTER
```

Password: Operator

Default: 0 sec (function disabled)
Min: 0 sec
Max: 60 sec

Scale Data Scroll

Scale data defines the specific parameters of the scale.

1. Define the Number of Scales

   The feeder controller can control two independent scales. The number of scales that can be programmed depends on the number of A/D boards installed.

   This screen only appears if (2) A/D boards are installed.

```
        - SC DATA SCROLL 1 -
Number of scales
 1
ENTER
```

Password: Service

Default: 1
Min: 1
Max: 2

2. Defining Scale Capacity and Divisions

   The next entry is the scale capacity, which is the maximum capacity of the scale. This entry also defines the default number of decimal places that are used for display weight values. Use numeric keys for entering the number, confirm with ENTER. Scroll down.

```
        - SC DATA SCROLL 2 -
Max. scale capacity
 100.0 lbs
ENTER      SCALE#
```

Password: Service

Default: 100.0
Min: 1
Max: 200000

When the Scale capacity is entered, the number of decimal places is also defined. If, for example, the operator enters 500.0, this sets the "Scale Divisions" parameter to 0.1. Advancing to the next scroll, the operator then sees the Scale Division corresponding to the just entered Scale Capacity (in the example 0.1). If required, the operator is able to alter the Scale Division to any of the available options.

Press the ENTER soft key to accept the default divisions, or the CHOICES soft key to scroll selections. Press ENTER to confirm your selection. Scroll down.

```
        - SC DATA SCROLL 3 -
Scale divisions
>0.1<
CHOICE    ENTER       SCALE#
```

Password: Service

Default: 0.1
Selections: 0.1, 0.2, 0.5, 1, 2, 5, 10, 20, 50, 0.01, 0.02, 0.05, 0.001, 0.002, 0.005

3. Enter Number of Load Cells of Your Scale

Enter the number of load cells of your scale.

```
        - SC DATA SCROLL 4 -
# of load cells
 1
ENTER     SCALE#
```

Password: Service

Default: 1
Min: 1
Max: 6

4. Defining the Load Cell(s)

Enter the load cell capacity as it appears on the label placed on the load cell.

```
- SC DATA SCROLL 5 -
Load cell capacity
250.0 lbs
ENTER      SCALE#
```

Password: Service

If ENGLISH or MIXED:		If METRIC:	
Default:	250.0 Lbs	Default:	100 kg
Min:	10	Min:	10
Max:	15000	Max:	15000

Enter the load cell sensitivity in mV/V as marked on the label of the load cell.

```
- SC DATA SCROLL 6 -
Load cell sensit.
3.000 mV/V
ENTER      SCALE#
```

Password: Service

Default:	3.000 mV/V
Min:	0.500 mV/V
Max:	3.500 mV/V

The resistance of the bridge of each load cell has to be entered here. The number of scrolls depends on the number of load cells specified per each scale.

```
- SC DATA SCROLL 7A -
Load cell #1
Res 350.00 Ohms
ENTER      SCALE#
```

Password: Service

Default:	350 Ohms
Min:	10 Ohms
Max:	1000 Ohms

If # of Load Cells is 2 or more:

```
- SC DATA SCROLL 7B -
Load cell #2
Res 350.00 Ohms
ENTER      SCALE#
```

Password: Service

Same default and limits of load cell #1.

If # of Load Cells is 3 or more:

```
        - SC DATA SCROLL 7C -
Load cell #3
Res 350.00 Ohms
ENTER      SCALE#
```

Password: Service

Same default and limits of load cell #1.

If # of Load Cells is 4 or more:

```
        - SC DATA SCROLL 7D -
Load cell #4
Res 350.00 Ohms
ENTER      SCALE#
```

Password: Service

Same default and limits of load cell #1.

If # of Load Cells is 5 or more:

```
        - SC DATA SCROLL 7E -
Load cell #5
Res 350.00 Ohms
ENTER      SCALE#
```

Password: Service

Same default and limits of load cell #1.

If # of Load Cells is 6:

```
        - SC DATA SCROLL 7F -
Load cell #6
Res 350.00 Ohms
ENTER      SCALE#
```

Password: Service

Same default and limits of load cell #1.

Enter the lever ratio of the scale

```
        - SC DATA SCROLL 8 -
Lever ratio
1.000
CHOICE     ENTER        SCALE#
```

Password: Service

Default: 1
Min: 0.1
Max: 5

Calibration Data Scroll

The CAL DATA scroll allows the operator to set parameters which relate to the calibration of the scale.

1. Defining the Calibration Mode

   Select which simulated method of automatic calibration is to normally be used. The selected method is the only one displayed in the calibration section of MENU 1.

```
       -  CAL DATA SCROLL 1 -
Calibration mode
> R-Cal <
CHOICE     ENTER
```

Password: Operator

Default: R-CAL
Selections: R-CAL, WEIGHTS

A. Detailing the Test Weight Parameters

   This section only applies if TEST WEIGHTS mode was selected as the preferred method. Enter the weight of the test weights that are going to be used for the calibration.

```
        - CAL DATA SCROLL 2 -
Total test weight on
scale 0.000 lbs
ENTER      SCALE#
```

Password: Service

If ENGLISH or MIXED:		If METRIC:	
Default:	0.000 Lbs.	Default:	0.000 kg
Min:	0.000	Min:	0.000
Max:	5000.000	Max:	5000.000

B. Detailing the R-CAL Parameters

This section only applies if R-CAL mode was selected as the preferred method. Enter the resistance in Ohms of the electronic resistance installed in the Feeder Controller. If no changes have been made after the Feeder Controller has left Thermo Fisher Scientific, the default value applies.

```
      -  CAL DATA SCROLL 3  -
R-Cal selected res
  165000 ohms
ENTER      SCALE#
```

Password: Service

Default:	165000 Ohms
Min:	10 Ohms
Max:	1000000 Ohms

The system calculates the CALCON (Calibration Constant) based on the mechanical and electrical parameters entered in the Scale Data Scroll. This menu is for reference only.

```
      -  CAL DATA SCROLL 4 -
R-Cal constant
   ________ W.U.
                        SCALE#
```

The RCAL factor can be computed during the autospan function and used to correct the error between the two span methods.

```
      -  CAL DATA SCROLL 5  -
R-Cal factor
 0 %
ENTER      +/-          SCALE#
```

Password: Service

Default: INVALID (0)
Min: -99.99 %
Max: +99.99 %

2. Entering a Calibration Interval

If an optional COMM A board is installed, the system can be programmed to prompt the operator when a certain amount of time has passed since the last calibration. If you do not want to use this option, confirm the default 0 days interval, otherwise enter the number of days. The calibration date displayed in Scroll 7 is automatically updated whenever a calibration is performed. If a non-zero value is entered, an alarm appears after the time is elapsed. The alarm can only be cleared after a calibration check is executed.

```
- CAL DATA SCROLL 6 -
Calibration interval
 0 Days
ENTER
```

Password: Operator

Default: 0 Days (function disabled)
Min: 0 Days
Max: 365 Days

This scroll displays the date of the last calibration and the expected date of the next one, based on the entry in the previous screen.

```
- CAL DATA SCROLL 7 -
Calibration date
Last MM-DD-YYYY
Next MM-DD-YYYY
```

Main Menu 3

Main Menu 3 is used for protecting and unprotecting the system using passwords, and to perform diagnostic and test functions. The diagnostic functions can only be operated after removing all password protection, and should only be used by experienced technical personnel. Most test functions are not password protected.

```
- MAIN MENU 3 -
Press MENU for more

PROT    DIAG    TEST
```

The PROTection menu only becomes visible after passwords have been defined (see the Diagnostics Menu).

Changing the Protection Level

The feeder controller has three protection levels to which specific passwords are related.

The protection levels and the passwords are defined using the following scheme:

Protection	Password	Status
NONE	SERVICE	The system is totally unprotected. All data can be read or changed.
LIMITED	OPERATOR	The system is partially protected. Data of normal use are available. Setup is prevented.
PROTECTED	-	The system is totally protected. Process data can be read. No change allowed.

A SERVICE password is required to access the NONE level. An OPERATOR or a SERVICE password is required to access the LIMITED level.

Use the NONE key to access the NONE protection level. If the current level is not already NONE, the SERVICE password is required.

Use the LIMITED key to access the limited protection level. If the system is in level NONE, change is immediate. If it is in PROT level, the SERVICE or OPERATOR password is required. Use the PROT key to access the protected level. No password is required.

```
            - PROTECTION LEVEL -
> NONE <

NONE        LTD          PROT
```

Default:	NONE	
Selections:	NONE, LIMITED, PROTECTED	
Password:	from NONE to LTD or PROT:	not required
	from LTD to PROT:	not required
	from LTD to NONE:	SERVICE
	from PROT to NONE:	SERVICE
	from PROT to LTD:	OPERATOR or SERVICE

Pressing the soft key gives entry into desired level. Going from a low level to a higher level forces the password entry.

Diagnostics Scroll

1. A/D Raw Data

Diagnostic Scroll 1 shows the raw data from the A/D converter of the Feeder Controller (A/D gross) and the net value after the zero constant has been subtracted. The range of the A/D converter is from 0 to 262140 numbers.

```
      - DIAGNOST. SCROLL 1  -
A/D gross  00000
A/D net     0000
*              CALIB        SCALE#
```

Pressing the CALIB key enables Hardware Gain and the following scroll is displayed:

```
     - DIAGNOST. SCROLL 1A  -
Hardware gain
> 1 <
CHOICE     ENTER       SCALE #
```

Default: 1
Selections: 1, 2, 4, 8

This function amplifies the A/D gross and net values by the selected factor.

2. Readout Load Cell mV

The system displays the mV output of the load cell. The reading must be positive and must increase when the load increases.

```
      -  DIAGNOST. SCROLL 2  -
Weight on load cell
0.000 mV
              CALIB        SCALE #
```

Password: Service

If CALIB is pressed, the next two scrolls are displayed and can be used to fine tune the readout of mV/V.

```
- DIAGNOST. SCROLL 2A -
Loadcell output zero
15 A/D counts
ENTER      SCALE#
```

Password: Service

Default: 3497
Min: 0
Max: 30000

3. Change Passwords

The password can be changed by entering a new one. The operator can enter up to eight characters (numeric keys entries). The entered numbers are not echoed on the screen. Pressing just the ENTER key removes the password.

```
- DIAGNOST. SCROLL 3 -
ENTER SERVICE
PASSWORD   ********
ENTER
```

Password: Service

Default: No password

```
- DIAGNOST. SCROLL 4 -
ENTER OPERATOR
PASSWORD   ********
ENTER
```

Password: Operator

Default: No password

It is strongly suggested to write down the password and preserve a copy in a safe place. If the password is forgotten, see Section on Forgotten Password.

4. Display Software Version

The software version is displayed for reference only. If Thermo Fisher Scientific is called for a software problem, this number is requested.

```
- DIAGNOST. SCROLL 5 -
Software version
46.xx.xx.xx
```

5. Setup Date and Time

This section only applies if a COMM board is installed. The operator can set the current date and time. A battery operated clock calendar then maintains time and date even if power is removed. Day, Month, and Year are entered in sequence.

```
- DIAGNOST. SCROLL 6 -
Date:    DD-MM-YYYY
DAY:   _____
ENTER
```

Password: Service

Default:	00-00-0000
Min:	01-01-0000
Max:	12-31-2096

Time is entered in a similar way. The AM/PM key is used when time is in the English mode. See Display Scroll 7 in Main Menu 2.

```
- DIAGNOST. SCROLL 7 -
Time:      HH:MM
HOURS:     ______
ENTER      AM/PM
```

Password: Service

	24 hour am/pm	
Default:	00.00	01.00
Min:	00.00	01.00
Max:	23:59	11:59

6. Check Hardware Configuration

The system automatically recognizes when optional boards are installed. The following scrolls are used to show the configuration. Remember that when a board is acknowledged, the related information stays in memory even if the board is removed, until the operator deletes it by responding YES to the message shown at power on.

The following screen is displayed for each board installed in each slot.

- DIAGNOST. SCROLL 8 -
Board type slot #1

BOARD TYPE

- DIAGNOST. SCROLL 9 -
Board type slot #2

BOARD TYPE

- DIAGNOST. SCROLL 10 -
Board type slot #3

BOARD TYPE

- DIAGNOST. SCROLL 11 -
Board type slot #4

BOARD TYPE

- DIAGNOST. SCROLL 12 -
Board type slot #5

BOARD TYPE

- DIAGNOST. SCROLL 13 -
Board type slot #6

BOARD TYPE

BOARD TYPE can be:

- Premium A/D Board	A/D board approved version. - #1 Load cell input channel
- AD Board #1 channel	An optional depopulated version of the standard A/D board. - #1 Load cell input channel
- Dig I/O 16in/4out	Optional digital input output board. - #16 Optocoupled digital inputs - #4 Optocoupled digital outputs
- Dig I/O 16out/4in	Optional digital input output board. - #4 Optocoupled digital inputs - #16 Optocoupled digital outputs
- Load Out 16in/4out	Optional digital input output board dedicated to the Load Out. - #16 Optocoupled digital inputs - #4 Optocoupled digital outputs
- Load Out 16out/4in	Optional digital input output board dedicated to the Load Out. - #4 Optocoupled digital inputs - #16 Optocoupled digital outputs
- Analog I/O	Optional analog input output board. - #2 Current outputs - #2 Voltage inputs
- Current Out	Optional current output board. - #1 Current output
- Communication A	Serial communication board (RS232, RS485)
- Communication B	Field bus board (Not Available)

7. Force Cold Start

This scroll is used to cold start the instrument in the event the software becomes corrupted. Factory default constants will be installed when the instrument restarts; all field entered data will have to be replaced.

```
    - DIAGNOST. SCROLL 14 -
Force cold start

ENTER
```

Press ENTER and the following screen appears.

```
          ATTENTION
        ARE YOU SURE?

YES        RETURN
```

ATTENTION ARE YOU SURE? is FLASHING.

Press RETURN and SCROLL 14 reappears in the display.

Press YES and the following screen appears.

```
INSTALL FACORY DEFAULTS?

YES                     RETURN
```

Press RETURN and SCROLL 14 reappears in the display.

Press YES and the following screen appears.

```
      -  MEMORY ERASED  -
       Choose the language
           key to continue
ESP          USA
```

Refer to Programming the Micro-Tech 2104 Feeder Controller to continue.

Tests

1. Lamp Test

Press START to begin a Lamp Test of the Feeder Controller. All LED's and digits of the display blink for a number of seconds.

```
        -  TEST SCROLL 1  -
LAMP TEST

START
```

2. Self Test of the Unit

The system can perform some internal test functions, which can be used to detect malfunctions to the hardware devices.

```
- TEST SCROLL 2 -
Internal test of
microprocessor.
START
```

Password: Service

After START is pressed, the following screens are displayed in sequence.

```
- TEST SCROLL 2A -
Testing ROM
Test PASSED
```

```
- TEST SCROLL 2B -
Testing RAM
Test PASSED
```

```
- TEST SCROLL 2C -
Testing E2PROM
Test PASSED
```

Only if Audit Trail option is installed

The message "Test PASSED" is displayed if the test runs correctly. If something wrong is detected, then the message "Test FAILED" is displayed, and the soft key CONTINUE is shown. The operator has to press the key to go on to the next test.

3. Test Digital Inputs

The next screen is used to check the digital input circuitry. The display shows a 1 if the specific input is closed, 0 if open. If more digital I/O boards are installed, the NEXT soft key appears, allowing the operator to scroll between boards.

```
        -  TEST SCROLL 3  -
Dig input test
Slot#0              ----0000
                              NEXT
```

Slots are numbered 1 to 6, slot 0 is the mother board. Inputs are shown from right to left. If a board has 16 inputs, two screens are used to show the first and the second half, the lower half is shown first.

4. Test Digital Outputs

This test shows the status of each digital output and allows the operator to force the output for testing purposes. The output, when forced, stays on until the CLEAR soft key is pressed or the Run Menu is entered. If an output is forced and the scroll key is used for reaching some other menu, the output stays in the forced status until RUN is pressed. This allows the operator to check inputs while outputs are still in the forced status.

```
        -  TEST SCROLL 4  -
Dig output test
output # 1:         ON/OFF
ENTER               ON/OFF
```

Password: Service

To force an output, enter the desired number followed by ENTER. Then use the SET/RESET key to force it to the ON or OFF status. After the output has been forced, the CLEAR soft key appears in the middle position.

WARNING. FORCING THE DIGITAL OUTPUTS MAY CAUSE MACHINERY TO START. AFTER THE USER TRIES TO FORCE AN OUTPUT, THE FOLLOWING MESSAGE WILL BE DISPLAYED.

```
            WARNING
      EQUIPMENT MAY START

CONTINUE                ABORT
```

IF THE USER PRESSES CONTINUE, BE AWARE THE ACTION MAY CAUSE DAMAGE OR INJURY. IF THE USER PRESSES ABORT, THE SYSTEM WILL RETURN TO THE PREVIOUS SCROLL.

5. Test Current Outputs

This section only applies if a current output board is detected. The board can have one or two current output channels. It is possible to install more than one board for a maximum of 4 current outputs.

```
        - TEST SCROLL 5 -
Current output #1
should be 00.0 mA
ENTER      CLEAR
```

Password: Service

Default: 0.0 mA
Min: 0.0 mA
Max: 20.0 mA

To force the output, enter the desired number of milliamps and press ENTER. Press CLEAR to free the mA channel. Press NEXT key to pass to the next current output channel.

If the second current output is installed:

```
        - TEST SCROLL 6 -
Current output #2
should be 00.0 mA
ENTER      CLEAR
```

Password: Service

Default: 0.0 mA
Min: 0.0 mA
Max: 20.0 mA

If the third and fourth current outputs are installed:

```
        - TEST SCROLL 7 -
Current output #3
should be 00.0 mA
ENTER      CLEAR
```

Password: Service

Default: 0.0 mA
Min: 0.0 mA
Max: 20.0 mA

```
        - TEST SCROLL 8 -
Current output #4
should be 00.0 mA
ENTER      CLEAR
```

Password: Service

Default: 0.0 mA
Min: 0.0 mA
Max: 20.0 mA

6. Test Current Inputs

The following screen is displayed only if an analog input board is detected. It shows the status of each analog input channel.

```
        - TEST SCROLL 9 -
Voltage input
 #1          0.00 V
#2           0.00 V
```

Password: Service

7. Test Communication A

If a communication board is detected, the following screen is shown. The PORT 2 soft key is only shown if two boards are detected.

```
        - TEST SCROLL 10 -
Test communication A

PORT 1     PORT 2
```

Password: Service

By pressing the PORT 1 or PORT 2 soft key, the test is initiated. A test pattern is sent out on the TX output and read on the RX input. If the test fails, the message TEST FAILED is shown; otherwise, the message TEST PASSED is displayed.

NOTE. This test requires a hardware jumper to be installed between terminals TB5-8 (RX) and TB5-9 (TX) on the communication board.

8. Test Communication B

This test is similar to the previous one but works for the field bus version of the communication board (not available).

```
        - TEST SCROLL 11   -
Test communication B

START
```

Password: Service

9. Test BCD Output Board

If an optional 16 In/4 Out load out board is detected, the following screen appears.

```
        - TEST SCROLL 12  -
BCD Output test

ENTER                    CLEAR
```

Password: Service

Default: 0
Min: 0
Max: 9999 or 7999 if parity check enabled

To force the outputs, enter a number followed by ENTER. The CLEAR key appears indicating the output is being forced to a value. Pressing CLEAR frees the output.

10. Test BCD Input Board

The following test is displayed if an optional 16 In/4 Out load out board is detected.

```
        - TEST SCROLL 13  -
BCD Input test
   ____
```

The value read on the BCD input is displayed dynamically.

11. Control Simulation

```
        - TEST SCROLL 14   -
Simulated control.
> No <
CHOICE     ENTER        SCALE#
```

Password: Service

Default: NO
Selections: YES, NO

When enabled, the weight is internally simulated, ignoring the load cell signal.

12. Test the CPU Serial Line

```
        - TEST SCROLL 15  -
Test CPU serial line

START
```

Password: Service

If START is pressed, the system performs a test of the serial line of the CPU board.

NOTE. The CPU serial line is not implemented in the current hardware, therefore the normal response is TEST FAILED.

13. Test the Keyboard and Switches

```
        - TEST SCROLL 16  -
Keyboard + switches
Key: ______
Switches: 00000000
```

Use the RUN key to end the keyboard test. After RUN is pressed, all the keys are executed.

Main Menu 4

Main Menu 4 is dedicated to the definition of the input output (I/O), alarms and optionally of the load out (batch).

```
                - MAIN MENU 4  -
Press MENU for more
I/O             ALARMS
DEFINE          DEFINE
```

I/O Definition Scroll

The input output section of the system is fully configurable. All inputs and outputs are conventionally numbered and can be assigned to physical input and output terminals depending on the needs. The following section explains how to configure I/O. However, the standard configuration as provided by the factory is normally satisfactory.

1. Define Current Outputs

   If a current output board is installed, the following menus are shown for configuring the current output(s). Use the CHOICE key to change the variable and the ENTER key to confirm. The NEXT key allows the operator to set up to four (4) current outputs if installed.

```
        - I/O DEF SCROLL 1 -
Current out define
#1  > Control <
CHOICES     ENTER       NEXT
```

Password: Service

Default: CONTROL, NONE, NONE, NONE
Selections: NONE, WEIGHT, RATE, CONTROL

Or, if more than one scale is defined:
Selections: NONE, WEIGHT S1, WEIGHT S2, RATE S1, RATE S2, CONTROL S1, CONTROL S2

If the selection of the previous screen is not NONE, the operator can set up the range, delay and damping of the current output.

The range is selectable between the standard 0 to 20 mA and 4 to 20 mA both in direct and reverse mode. Select 0-20 or 4-20 if you want to have an increase in current for any increase of the variable. Select 20-0 or 20-4 if you want to have a decrease of current for any increase of the variable.

```
        - I/O DEF SCROLL 1A -
Current out range
#1  > 4-20 mA <
CHOICES    ENTER     NEXT
```

Password: Service

Default: 4-20 mA
Selections: 0-20 mA, 4-20 mA, 20-0 mA, 20-4 mA

Each current output can be delayed.

```
        - I/O DEF SCROLL 1B -
Current out delay
#1   0  sec
ENTER                    NEXT
```

Password: Service

Default: 0 sec
Min: 0 sec
Max: 300 sec

A damping factor can be also selected for each current channel. This damping only affects the current output, not the displayed variable, which has a separate damping factor, selectable in MAIN MENU 2, DISPLAY.

```
        - I/O DEF SCROLL 1C -
Current out damping
#1   0  sec
ENTER      NEXT
```

Password: Operator

Default: 0 sec
Min: 0 sec
Max: 400 sec

Up and Down arrows move between range, delay and damping. NEXT moves to the next current output.

2. Define Analog Inputs

If an analog input board is installed (not the Load Cell board), the following screens are displayed. Analog input can be used for measuring the moisture or as a remote setpoint input.

```
        - I/O DEF SCROLL 2A -
Analog input #1 def.
#1:     > None <
CHOICE       ENTER       CALIB
```

Password: Service

Default: NONE
Selections: NONE, SETPOINT, MOISTURE

If more than one scale is defined:
Selections: NONE, SETPOINT S1, SETPOINT S2,
MOISTURE S1, MOISTURE S2

```
        - I/O DEF SCROLL 2B -
Analog input #2 def.
#2:    > None <
CHOICES    ENTER     CALIB
```

Password: Service

Default: NONE
Selections: NONE, SETPOINT, MOISTURE

If more than one scale is defined:
Selections: NONE, SETPOINT S1, SETPOINT S2,
MOISTURE S1, MOISTURE S2

Pressing the CALIB key displays the next scrolls.

A. Setup Analog Input – Moisture

If an analog input has been programmed for reading the moisture signal, and CALIB was pressed, the following screens appear. The operator can calibrate the input signal by entering the equivalence between percent of moisture and mA on two points. Use the %MOIST. key to enter the percent of moisture. Use the mA key to enter the corresponding number of mA. Confirm with ENTER.

Only if ANALOG INPUT (moisture) option is enabled and CALIB is pressed:

```
        - I/O DEF SCROLL 2A -
Moist. input cal.#1
0.0 %M      =     0.0 V
ENTER      %MOIST      VOLTS
```

Password: Service

Default:	0.0 %	0.0 Volts
Min:	0.0 %	0.0 Volts
Max:	20.0 %	2.5 Volts

```
        - I/O DEF SCROLL 2B -
Moist. input cal. #2
5.0 %M      =      5.0 V
ENTER     %MOIST    VOLTS
```

Password: Service

Default:	5.0 %	5.0 Volts
Min:	1.0 %	1.0 Volts
Max:	9999.0 %	5.0 Volts

B. Setup Analog Input - Remote Setpoint

Only if ANALOG INPUT (setpoint) option is enabled and CALIB is pressed:

```
        - I/O DEF SCROLL 2A -
Rem. setpoint cal #1
0.0 %S      =      0.0 V
ENTER     %SET       VOLTS
```

Password: Service

Default:	0.0 %	0.0 Volts
Min:	0.0 %	0.0 Volts
Max:	20.0 %	2.50 Volts

```
        - I/O DEF SCROLL 2B -
Rem. setpoint cal #2
100.0 %S      =      5.0 V
ENTER     %SET       VOLTS
```

Password: Service

Default:	100.0%	5.0 Volts
Min:	1.0 %	1.0 Volts
Max:	9999.0 %	5.0 Volts

A damping factor can also be selected for each analog input channel.

```
        - I/O DEF SCROLL 2C -
Analog input damping
#1    _____ sec
ENTER      NEXT
```

Password: Operator

Default: 0 sec
Min: 0 sec
Max: 400 sec

3. Define Digital Inputs

Digital inputs can be programmed. The following screen shows one logical function per time and allows the operator to assign it to a physical input. The NEXT key scrolls between the logical functions. The NC/NO key selects the Normally Open (NO) or Normally Closed (NC) status of the input. Normally Open means the input is inactive when disconnected. To program a function, scroll with the NEXT key until the function is displayed, then enter the number of the physical input and confirm with ENTER. Finally, scroll with NC/NO until the desired mode is displayed. By assigning a function to 0, the function is disabled.

```
        - I/O DEF SCROLL 3 -
Dig. input def.:          1
Ext Alarm 1               0  NC
ENTER      NC/NO     NEXT
```

Password: Service

The following table shows the available logical selections that can be assigned to any available physical input. Typical field wiring drawings and customer specific field wiring drawings show Reset alarms defaulted to #1 NO, Refill defaulted to #2 NO, and Running defaulted to #3 NO. Default selections can be reassigned to any physical input if desired. External alarms 1, 2, and 3 can be assigned to logical functions not on the selection list.

Logical selections should not be reassigned after the physical inputs have been wired.

CAUTION. LOGICAL SELECTIONS RETURN TO THE DEFAULT IF THE FEEDER CONTROLLER IS COLD STARTED.

SELECTIONS:	DEFAULT:	
External alarm 1	0 NO	0 = Function Disabled
External alarm 2	0 NO	
External alarm 3	0 NO	
Print	0 NO (Only if COM installed)	
Print S1	0 NO (Only if COM installed)	
Print S2	0 NO (Only if COM installed)	
Reset alarms	1 NO	
Reset totals	0 NO	
Reset totals S1	0 NO	
Reset totals S2	0 NO	
Refill	2 NO	
Refill S1	0 NO	
Refill S2	0 NO	
Local/Remote Control	0 NO	
Local/Remote Control S1	0 NO	
Local/Remote Control S2	0 NO	
Auto/Man Control	0 NO	
Auto/Man Control S1	0 NO	
Auto/Man Control S2	0 NO	
Running	3 NO	
Running S1	0 NO	
Running S2	0 NO	
Regulation Interlock	0 NO	
Regulation Interlock S1	0 NO	
Regulation Interlock S2	0 NO	

Three assignable inputs are standard on the mother board.

MOTHER BOARD INPUTS

PHYSICAL INPUT NUMBER	ASSIGNED FUNCTION	FIELD MOUNT	PANEL MOUNT
1	_____	TB9 4 & 2	TB2 1 & 3
2	_____	TB8 13 & 14	TB2 5 & 7
3	_____	TB8 11 & 12	TB2 8 & 10
4	_____	TB8 9 & 10	TB2 9 & 10

Additional assignable logical inputs from the above table can be selected by adding optional I/O boards. Available options are 4in/16out, 16in/4out or 20in/20out by adding both boards.

DIGITAL INPUT/OUTPUT BOARD INPUTS

		INSTALLED OPTIONS		
PHYSICAL INPUT NUMBER	ASSIGNED FUNCTION	4IN/16OUT ONLY	16IN/4OUT ONLY	4IN/16OUT AND 16IN/4OUT
5	_____	J15 - 2	J16 - 17	J15 - 2
6	_____	J15 - 15	J16 - 5	J15 - 15
7	_____	J15 - 3	J16 - 18	J15 - 3
8	_____	J15 - 16	J16 - 6	J15 - 16
9	_____		J16 - 19	J16 - 17
10	_____		J16 - 7	J16 - 5
11	_____		J16 - 20	J16 - 18
12	_____		J16 - 8	J16 - 6
13	_____		J16 - 21	J16 - 19
14	_____		J16 - 9	J16 - 7
15	_____		J16 - 22	J16 - 20
16	_____		J16 - 10	J16 - 8
17	_____		J16 - 23	J16 - 21
18	_____		J16 - 11	J16 - 9
19	_____		J16 - 24	J16 - 22
20	_____		J16 - 12	J16 - 10
21	_____			J16 - 23
22	_____			J16 - 11
23	_____			J16 - 24
24	_____			J16 - 12

WARNING. CHANGING THE DEFINITION OF THE DIGITAL INPUTS MAY CAUSE MACHINERY TO START. AFTER THE OPERATOR TRIES TO CHANGE A DEFINITION, THE FOLLOWING MESSAGE IS DISPLAYED.

```
WARNING
EQUIPMENT MAY START

CONTINUE     ABORT
```

IF THE OPERATOR PRESSES CONTINUE, BE AWARE THE ACTION MAY CAUSE DAMAGE OR INJURY. IF THE OPERATOR PRESSES ABORT, THE SYSTEM RETURNS TO THE PREVIOUS SCROLL.

4. Define Digital Outputs

Digital outputs can be programmed. The following screen shows one logical function per time, and allows the operator to assign it to a physical output. The NEXT key scrolls between the logical functions. The NC/NO key selects the Normally Open (NO) or Normally Closed (NC) status of the output. Normally Open means the output is not energized in normal conditions. To program a function, scroll with NEXT until the function is displayed, then enter the number of the physical output and confirm with ENTER. Finally, scroll with NC/NO until the desired mode is displayed. Assigning a function to 0 disables the function.

```
- I/O DEF SCROLL 4 -
Dig. output def. 1
Alarms:                0    NC
ENTER      NC/NO    NEXT
```

Password: Service

The following table shows the available logical selections that may be assigned to any available physical output. Typical field wiring drawings and customer specific field wiring drawings show READY defaulted to #1 NO, ALARM defaulted to #2 NC and Refill defaulted to #3 NO. Default selections can be reassigned to any physical output if desired.

Logical selections should not be reassigned after the physical outputs have been wired.

CAUTION. LOGICAL SELECTIONS RETURN TO THE DEFAULT IF THE FEEDER CONTROLLER IS COLD STARTED.

Digital output name ..... s1 or .... s2 is only displayed if more scales are defined.

SELECTIONS:	DEFAULT:
Alarm	2 NC
Shut down	0 NC
Ready	1 NO
Refill	3 NO (Only if one scale defined)
Refill S1	0 NO
Refill S2	0 NO
High weight	0 NO (Only if high weight alarm enabled)
High weight S1	0 NO (Only if high weight alarm enabled)
High weight S2	0 NO (Only if high weight alarm enabled)L
Low weight	0 NO (Only if low weight alarm enabled)
Low weight S1	0 NO (Only if low weight alarm enabled)
Low weight S2	0 NO (Only if low weight alarm enabled)
High rate	0 NO (Only if high rate alarm enabled)
High rate S1	0 NO (Only if high rate alarm enabled)
High rate S2	0 NO (Only if high rate alarm enabled)L
Low rate	0 NO (Only if low rate alarm enabled)
Low rate S1	0 NO (Only if low rate alarm enabled)
Low rate S2	0 NO (Only if low rate alarm enabled)
H Dev Pos	0 NO (Only if high pos dev alarm enabled)
H Dev Pos S1	0 NO (Only if high pos dev alarm enabled)
H Dev Pos S2	0 NO (Only if high pos dev alarm enabled)
H Dev Neg	0 NO (Only if high neg dev alarm enabled)
H Dev Neg S1	0 NO (Only if high neg dev alarm enabled)
H Dev Neg S2	0 NO (Only if high neg dev alarm enabled)
HH Dev Neg	0 NO (Only if high high neg dev alarm enabled
HH Dev Neg S1	0 NO (Only if high high neg dev alarm enabled
HH Dev Neg S2	0 NO (Only if high high neg dev alarm enabled

Loc/Rem	0 NO
Loc/Rem S1	0 NO
Loc/Rem S2	0 NO
Auto/Man	0 NO
Auto/Man S1	0 NO
Auto/Man S2	0 NO
Increase	0 NO
Increase S1	0 NO
Increase S2	0 NO
Decrease	0 NO
Decrease S1	0 NO
Decrease S2	0 NO
Totalizer	0 NO (Only if one scale defined)
Totalizer S1	0 NO
Totalizer S2	0 NO

One non-assignable Fault output and three assignable outputs are standard on the mother board.

MOTHER BOARD OUTPUTS

PHYSICAL OUTPUT NUMBER	ASSIGNED FUNCTION	FIELD MOUNT	PANEL MOUNT
	Fault Output	TB8 1 & 2	TB2 15 & 16
1	_____	TB8 7 & 8	TB2 12 & 16
2	_____	TB8 5 & 6	TB2 13 & 16
3	_____	TB8 3 & 4	TB2 14 & 16

Additional assignable logical selections from the above table can be assigned by adding optional I/O boards. Available options are 4in/16out, 16in/4out or 20in/20out by adding both boards.

DIGITAL INPUT/OUTPUT BOARD OUTPUTS

PHYSICAL OUTPUT NUMBER	ASSIGNED FUNCTION	INSTALLED OPTIONS 4IN/16OUT ONLY	16IN/4OUT ONLY	4IN/16OUT AND 6IN/4OUT
4	_____	J15 - 17	J16 - 2	J16 - 2
5	_____	J15 - 5	J16 - 15	J16 - 15
6	_____	J15 - 18	J16 - 3	J16 - 3
7	_____	J15 - 6	J16 - 16	J16 - 16
8	_____	J15 - 19		J15 - 17
9	_____	J15 - 7		J15 - 5
10	_____	J15 - 20		J15 - 18
11	_____	J15 - 8		J15 - 6
12	_____	J15 - 21		J15 - 19
13	_____	J15 - 9		J15 - 7
14	_____	J15 - 22		J15 - 20
15	_____	J15 - 10		J15 - 8
16	_____	J15 - 23		J15 - 21
17	_____	J15 - 11		J15 - 9
18	_____	J15 - 24		J15 - 22
19	_____	J15 - 12		J15 - 10
20	_____			J15 - 23
21	_____			J15 - 11
22	_____			J15 - 24
23	_____			J15 - 12

WARNING. CHANGING THE DEFINITION OF THE DIGITAL OUTPUTS MAY CAUSE MACHINERY TO START. AFTER THE OPERATOR TRIES TO CHANGE A DEFINITION, THE FOLLOWING MESSAGE IS DISPLAYED.

WARNING
EQUIPMENT MAY START

CONTINUE ABORT

IF THE OPERATOR PRESSES CONTINUE, BE AWARE THE ACTION MAY CAUSE DAMAGE OR INJURY. IF THE OPERATOR PRESSES ABORT, THE SYSTEM RETURNS TO THE PREVIOUS SCROLL.

5. Define BCD Output Data

If an optional Load Out output board (4 in/16 out) is installed, the operator can select the related BCD variable. Press CHOICE key to scroll selections. Press ENTER to confirm your selection.

```
        -  I/O DEF SCROLL 5  -
BCD Output variable
> None <
CHOICE      ENTER
```

Password:
Service

Default: NONE
Selections: NONE, WEIGHT, RATE

Or, if two scales enabled:
Selections: NONE, WEIGHT S1, RATE S1,
WEIGHT S2, RATE S2

If a selection other than NONE is made, the following screens allow the operator to define the polarity and the parity check of the BCD output. The polarity selection reverses the signals from NO to NC and vice versa. If a parity criterion is selected, the most significant bit of the BCD output is used for parity check.

```
        -  I/O DEF SCROLL 5A  -
BCD Output polarity
> Negative <
CHOICES     ENTER
```

Password:
Service

Default: NEGATIVE
Selections: POSITIVE, NEGATIVE

```
        -  I/O DEF SCROLL 5B  -
BCD Output parity
> No <
CHOICES     ENTER
```

Password:
Service

Default: NO
Selections: NO, YES

6. Define BCD Input Data

If the optional Load Out input board (16 in/4 out) is installed, the following screens allow the operator to define the related variable and the polarity of the signals. Press the CHOICE soft key to scroll selections. Press ENTER to confirm your selection.

```
        -  I/O DEF SCROLL 6  -
BCD Input Variable
> Batch set point <
CHOICES     ENTER
```

Password:
Service

Default: OFF
Selections: OFF, BATCH SET POINT, BATCH PRE-ACT

The next screen appears if the BCD input variable is set to Batch Set Point or Batch Pre-Act. Scroll DOWN. Press the CHOICE soft key to scroll selections. Press ENTER to confirm your selection.

```
        -  I/O DEF SCROLL 6A  -
BCD Input Polarity
> Negative <
CHOICES     ENTER
```

Password:
Service

Default: NEGATIVE
Selections: NEGATIVE, POSITIVE

7. Define Remote Totalizer Output

If a digital output has been assigned to TOTALIZER function, the following two scrolls are displayed.

Set the divider according to the maximum rate the scale will run. The divider is entered in totalization unit (T.U.). The pulse frequency generated in normal conditions cannot exceed 50 Hz.

- I/O DEF SCROLL 7A - Remote counter div. 0.1 lbs ENTER	Password: Service

Default: 0.1
Min: 0.01
Max: 100

Enter the pulse width in seconds of the totalizer. A higher pulse width limits the maximum frequency. The default 0.1 sec is recommended for frequencies lower than 5 Hz.

- I/O DEF SCROLL 7B - Remote counter pulse width 0.1 sec ENTER	Password: Service

Default: 0.1 sec
Min: 0.01 sec
Max: 1.00 sec

Alarms Definition

The alarms of the feeder controller can be programmed. Process alarms such as low and high rate can be set to the desired range. In addition, all alarms can be defined to be:

ALARM
When an alarm occurs, the front panel ALARM status indicator illuminates. An ALARM message flashes in the lower, right hand RUN display. Pressing ALARM displays the alarm. Time and date are also displayed if the optional COMM board is installed.

Pressing RESET clears the alarm message if the alarm parameter has

cleared. If the alarm parameter has not cleared, the message “ACK” appears when RESET is pressed. When the alarm parameter clears, the alarm indication clears.

Pressing RUN at any time returns the operator to the RUN menu.

Alarms can be automatically printed if the print option is enabled.

SHUT DOWN
The alarm handler operates as above except the READY status indicator goes off at the same time as the ALARM status indicator comes on.

In the I/O definition scroll, alarm and ready can be assigned to N/C or N/O physical outputs. The output activates and deactivates at the same time as the front panel status indicators.

NONE
Alarm is deactivated.

1. Define High Weight Alarm

   Use the CHOICE key to turn on or off the threshold #1 alarm. Confirm with ENTER.

```
        - ALARM  SCROLL 1  -
High Weight Alarm
> no <
CHOICE    ENTER    SCALE#
```

Password:
Operator

Default: NO
Selections: YES, NO

If the selection in the previous screen was YES, enter the threshold set points for the alarm.

The UNITS key allows the operator to specify the set points in engineering units. The % key selects set points in percent referring to scale capacity.

```
      - ALARM  SCROLL 1A  -
High weight,
set 90 %
ENTER     UNITS     SCALE#
```

Password:
Operator

Default: 90 %
Min: 0 %
Max: 105 %

Enter the desired delay time before the alarm is monitored.

```
      - ALARM  SCROLL 1B  -
High weight,
delay 2 sec
ENTER                    SCALE#
```

Password:
Operator

Default: 2 sec
Min: 0 sec
Max: 90 sec

2. Define Low Weight Alarm

Use the CHOICE key to turn on or off the low weight alarm. Confirm with ENTER.

```
       - ALARM  SCROLL 2  -
Low weight alarm
> NO <
CHOICE    ENTER    SCALE#
```

Password:
Operator

Default: NO
Selections: YES, NO

If the selection in the previous screen was YES, enter the threshold set points for the alarm.

The UNITS key allows the operator to specify the set points in engineering units. The % key selects set points in percent referring to scale capacity.

```
      - ALARM  SCROLL 2A  -
Low weight,
set  10 %
ENTER      UNITS    SCALE#
```

Password:
Operator

Default: 10 %
Min: 0 %
Max: 105 %

Enter the desired delay time before the alarm is monitored.

```
      - ALARM  SCROLL 2B  -
Low weight,
delay 2 sec
ENTER                    SCALE#
```

Password:
Operator

Default: 2 sec
Min: 0 sec
Max: 90 sec

3. Define High Rate Alarm

Use the CHOICE key to turn on or off the high rate alarm. Confirm with ENTER.

```
       - ALARM  SCROLL 3  -
High rate alarm
> no <
CHOICE    ENTER        SCALE#
```

Password:
Operator

Default: NO
Selections: YES, NO

If the selection in the previous screen was YES, enter the threshold set points for the alarm.

The UNITS key allows the operator to specify the set points in engineering units. The % key selects set points in percent referring to scale capacity.

```
      - ALARM  SCROLL 3A  -
High rate,
set  90 %
ENTER      UNITS     SCALE#
```

Password:
Operator

Default: 90 %
Min: 0 %
Max: 105 %

Enter the desired delay time before the alarm is monitored.

```
      - ALARM  SCROLL 3B  -
High rate,
delay 2 sec
ENTER                    SCALE#
```

Password:
Operator

Default: 2 sec
Min: 0 sec
Max: 90 sec

4. Define Low Rate Alarm

Use the CHOICE key to turn on or off the low rate alarm. Confirm with ENTER.

```
       - ALARM  SCROLL 4  -
Low rate alarm
> no <
CHOICE    ENTER    SCALE#
```

Password:
Operator

Default: NO
Selections: YES, NO

If the selection in the previous screen was YES, enter the threshold set points for the alarm.

The UNITS key allows the operator to specify the set points in engineering units. The % key selects set points in percent referring to scale capacity.

```
      - ALARM  SCROLL 4A  -
Low rate,
set    ______ %
ENTER      UNITS     SCALE#
```

Password:
Operator

Default: 10 %
Min: 0 %
Max: 105 %

Enter the desired delay time before the alarm is monitored.

```
      - ALARM  SCROLL 4B  -
Low rate,
delay    _____ sec
ENTER      SCALE#
```

Password:
Operator

Default: 2 sec
Min: 0 sec
Max: 90 sec

5. Define High Positive Deviation Alarm

```
       - ALARM  SCROLL 5  -
H Pos. Dev Alarm
> no <
CHOICE     ENTER    SCALE#
```

Password:
Operator

Default: NO
Selections: YES, NO

Only if High Positive Deviation Alarm selected.

Enter the Set Point in % and the activation delay.

```
      - ALARM  SCROLL 5A  -
H Pos. dev. set
 10 %    10 sec
ENTER SET/DELAY SCALE#
```

Password:
Operator

Default:	10%	10 sec
Min:	0%	0 sec
Max:	105%	90 sec

6. Define High High Positive Deviation Alarm

```
      - ALARM  SCROLL 6  -
HH Pos. dev. alarm
> no <
CHOICE    ENTER    SCALE#
```

Password:
Operator

Default:	NO
Selections:	YES, NO

Only if High High Positive Deviation Alarm selected.

Enter the Set Point in % and the activation delay.

```
      - ALARM  SCROLL 6A  -
HH Pos. Dev. set
 20 %    10 sec
ENTER SET/DELAY SCALE#
```

Password:
Operator

Default:	20%	10 sec
Min:	0%	0 sec
Max:	105%	90 sec

7. Define High Negative Deviation Alarm

```
      - ALARM  SCROLL 7  -
H Neg. Dev Alarm
> no <
CHOICE    ENTER    SCALE#
```

Password:
Operator

Default: NO
Selections: YES, NO

Only if High Negative Deviation Alarm selected.

Enter the Set Point in % and the activation delay.

```
        - ALARM  SCROLL 7A  -
H Neg. dev. set
 10 %    10 sec
ENTER SET/DELAY SCALE#
```

Password:
Operator

Default: 10% 10 sec
Min: 0% 0 sec
Max: 105% 90 sec

8. Define High High Negative Deviation Alarm

```
        - ALARM  SCROLL 8  -
HH Neg. dev Alarm
> no <
CHOICE     ENTER    SCALE#
```

Password:
Operator

Default: NO
Selections: YES, NO

Only if High High Negative Deviation Alarm selected.

Enter the Set Point in % and the activation delay.

```
        - ALARM  SCROLL 8A  -
HH Neg. dev. set
 20 %    10 sec
ENTER    SET/DLY    SCALE#
```

Password:
Operator

Default: 20% 10 sec
Min: 0% 0 sec
Max: 105% 90 sec

9. Setup Alarm Modes

The following message is displayed for 3 seconds:

```
- ALARM SCROLL 9 -
- ALARM DEFINITION -
Use NEXT key or
enter alarm number.
```

After 3 seconds, the following screen is displayed. The operator can use the CHOICE soft key to select the desired mode between ALARM (just a warning message), SHUT DOWN (warning plus fault output) and NONE (no action). Confirm with ENTER. Use the NEXT key to scroll between alarms, or enter the alarm number.

```
ALARM NUMBER #1
Clock Fail
set as >ALARM<
CHOICE    ENTER    NEXT
```

Password:
Service

Main Menu 5

Main Menu 5 is dedicated to the serial options. COMM A is used to set up the serial line of the optional board Communication A, and PRINT is used for setting up the printer output. Main Menu 5 does not appear unless an optional COMM A is installed.

```
- MAIN MENU 5 -
Press MENU for more

COMM A    COMM B    PRINT
```

Communication A Scroll

The communication board A has one serial channel, which can be configured using jumpers as an RS232 or an RS485 channel. The serial channel can be used for printing or for a serial communication with an intelligent device such as a PLC or a PC. Two boards can be installed and programmed, typically one for the printer and one for the supervisor.

The following screens define the communication parameters for the first and the second channel.

```
            -  COMM A SCROLL 1  -
Baud rate port #1
>2400<
CHOICE        ENTER
```

Password: Service

Default: 9600

Selections: 110, 150, 300, 600, 1200, 2400, 4800, 9600, 19200

```
            -  COMM A SCROLL 2  -
Set parity port #1
>No parity<
CHOICE        ENTER
```

Password: Service

Default: NO PARITY
Selections: EVEN PARITY, ODD PARITY, NO PARITY

```
            -  COMM A SCROLL 3  -
Stop bits port #1
>1 stop bit<
CHOICE        ENTER
```

Password: Service

Default: 1 STOP BIT
Selections: 1 STOP BIT, 2 STOP BITS

```
            -  COMM. A SCROLL 4  -
Wordlength port #1
> 8  bits <
CHOICE        ENTER
```

Password: Service

Default: 8 BITS
Selections: 7 BITS, 8 BITS

Some commonly used protocols are implemented in the system. See Serial Communications manual for details. Possible selections are:

PC-MASTER	Thermo Fisher Scientific proprietary protocol: Multi Drop, Master Slave.
SIEMENS 3964R	A proprietary protocol of Siemens. Point to point, Multi Master.
ALLEN BRADLEY DF1	A proprietary protocol of Allen Bradley. Multi Drop, Master Slave.
AEG MODICON	A proprietary protocol of AEG. Multi Drop, Master Slave.
PRINTER	Not a protocol, selects printer output.

```
          - COMM. A SCROLL  5  -
Protocol port #1
> PC Master <
CHOICE        ENTER
```

Password: Service

Default: PRINTER
Selections: PC-MASTER, SIEMENS 3964R, ALLEN BRADLEY DF1, AEG MODICON, PRINTER

If the selected protocol is not PRINTER, the following screens define the ADDRESS of the device in the multi drop line, and the access permission from the remote supervisor. If NONE is selected, the supervisor has full access to the device. If LIMITED is selected, the supervisor only accesses those variables that are accessible with the OPERATOR password. If PROTECTED is selected, the unit is write protected.

If a second communication board is installed, the following screen appears. These screens operate exactly as the ones dedicated to the communication board 1.

```
          - COMM. A SCROLL 6  -
Baud rate port #2
> 2400 <
CHOICE       ENTER
```

Password: Service

Default: 9600
Selections: 110, 150, 300, 600, 1200, 2400, 4800, 9600, 19200

```
- COMM. A SCROLL 7 -
Parity port #2
> No parity <
CHOICE ENTER
```

Password: Service

Default: NO PARITY
Selections: NO PARITY, EVEN PARITY, ODD PARITY

```
- COMM. A SCROLL 8 -
Stop bits port #2
> 1 stop bit <
CHOICE ENTER
```

Password: Service

Default: 1 STOP BIT
Selections: 1 STOP BIT, 2 STOP BITS

```
- COMM. A SCROLL 9 -
Wordlength port #2
> 8 bits <
CHOICE ENTER
```

Password: Service

Default: 8 BITS
Selections: 7 BITS, 8 BITS

```
- COMM. A SCROLL 10 -
Protocol port #2
> PC Master <
CHOICE ENTER
```

Password: Service

Default: PRINTER
Selections: PC MASTER, SIEMENS 3964R, ALLEN BRADLEY DF1, AEG MODICON, PRINTER

```
- COMM. A SCROLL 11 -
Cts
> disactive <
CHOICE        ENTER
```

Password: Service

Default: DISACTIVE
Selections: DISACTIVE, ACTIVE

```
- COMM. A SCROLL 12 -
Address
_____
ENTER                    SCALE #
```

Password: Service

Default: 1
Min: 1
Max: 255

```
- COMM. A SCROLL 13 -
Access level
> None <
CHOICE       ENTER
```

Password: Service

Default: NONE
Selections: NONE, LIMITED, PROTECTED

Communication B (Field Bus)

Refer to the Field Bus manual if this option is installed.

Print

The Feeder Controller has a fully programmable printer format. The following section explains how to program it according to the specific needs.

1. Define Handshaking

   The system can be configured to operate without any handshake (NONE), or using the Clear to Send signal (CTS) or the XON-XOFF sequence. Refer to the printer instruction manual to define which selection is required. The selection

NONE is only used for testing purposes. It is not recommended for normal use. If NONE is selected, the system is not able to recognize if the printer is on line or not, or if the paper is empty.

The most commonly used protocol is the CTS, which is a signal generated by the printer to indicate whether it is ready to receive data or not.

```
      - PRINTER SCROLL 1 -
Handshaking
> None <
CHOICE      ENTER
```

Password:
Service

Default: NONE
Selections: NONE, CTS, XON-XOFF

Different printers use different end of line patterns. Select the one you need for your printer.

```
      - PRINTER SCROLL 2 -
End of line
> CR <
CHOICE      ENTER
```

Password:
Service

Default: CR
Selections: CR, LF, CR+LF

Some printers cannot accept characters while they are printing. In some cases, the handshake is not well controlled by the printer, so a delay at end of line is helpful.

```
      - PRINTER SCROLL 3 -
Delay end of line
 0 sec
ENTER
```

Password:
Service

Default: 0 sec
Min: 0 sec
Max: 5 sec

A form feed character can be sent to the printer after each report to force the printer to eject the paper. If NO is selected, a normal END OF LINE character(s) is printed at the end of the report.

```
        - PRINTER SCROLL 4 -
Form Feed
> NO <
CHOICE      ENTER
```

Password:
Service

Default: NO
Selections: NO, YES

2. Periodical Printing

If you want to generate periodical printing, enter the number of minutes, hours or days in the following screen. By entering 0, the periodical printing is prevented. Use the INTV key to switch from minutes to hours and to days.

```
        - PRINTER SCROLL 5 -
Print interval
                          0  min
ENTER                   INTERV
```

Password:
Service

Default: 0 min
Min: 0 min, 0 hour, 0 days
Max: 59 min, 23 hour, 365 days

The system can print at specific times during the day. Enter the time you want to obtain the printing. Use the NEXT key to scroll between the print times (maximum 4). The ON/OFF key enables or disables the displayed print time.

```
        - PRINTER SCROLL 6 -
Print time # 1
time            HH:MM
ENTER     ON/OFF     NEXT
```

Password:
Operator

If 24 hours If am/pm

Default:	OFF	OFF
Min:	00:00	01:00
Max:	23:59	11:59

3. Define Print Format

By selecting YES in the following screen, the system is instructed to print one line each time a new alarm condition occurs. The alarm is printed as follows:

xx-xx-xxxx yy:yyz
kkkkkkkkkkkkk

where:

xx-xx-xxxx	Day, Month, Year, printed according to the local format as defined in Main Menu 2, Display
yy:yyz	Hour, Minutes, am/pm printed according to the local format as defined in Main Menu 2, Display
kkkkkkkkkkkkk	Alarm message, same message appearing on the screen

For example:
05-10-1998 8:14a
Clock Fail

```
      -  PRINTER SCROLL 7  -
Print alarms
> No <
CHOICE      ENTER
```

Password:
Service

Default:	NO
Selections:	YES, NO

There are two ways for defining the printing format. The first is to use the predefined format.

The second is to define your own format, using the printer setup screens listed below.

Select DEFAULT if you want the predefined format. Select USER DEFINED if you want to set up your own format.

```
      -  PRINTER SCROLL 8  -
Total report format
> Default <
CHOICE      ENTER
```

Password: Service

Default: DEFAULT
Selections: DEFAULT, USER

If your selection is USER, the following screens are displayed.

Define if you want to add a heading string in your report. String can be used to add the Customer name as well as other information that you want to include in the print format.

```
      -  PRINTER SCROLL 9  -
String #1
>yes<
CHOICE      ENTER
```

Password: Operator

Default: NO
Selections:: YES, NO

If you selected YES, the next two scrolls are displayed.

This first one allows the operator to define the string. Use the alphanumeric keypad, pressing the numeric key corresponding to the letter that you want to type. Every time you press a new key, the cursor moves to the right one place. If you need to use two times the same key (example for double letters), move the cursor right using the arrow keys (left and right soft keys).

```
     -  PRINTER SCROLL 9A  -
Contents string #1
_____________
<   ENTER    >
```

Password: Operator

Default: " "

Once you have defined the string, specify where the string has to be placed on the printed report. The coordinate is given in the following way:

```
   00000000001111111111122222222223...
   01234567890123456789012345678 90...
  +-----------------------------------------------> X
00|This line printed first
01|This line printed second          ^
02|                                  | DIRECTION OF
03|                                  | PAPER
04|
05|
06|
. v
. Y
```

Use the X-pos and Y-pos keys to enter the X and Y coordinates. Confirm with ENTER. By specifying 0,0, the string is not printed.

```
      -  PRINTER SCROLL 9B  -        Password:
String #1 pos.                       Operator
X = _____   , Y =  _____
ENTER                    X\Y-pos
```

	X	Y
Default:	1,	1
Min:	0,	1
Max:	24,	80

Define if you want to add a second heading string in your report.

```
      -  PRINTER SCROLL 10  -        Password:
String #2                            Operator
>yes<
CHOICE      ENTER
```

Default:	NO
Selections:	YES, NO

If you selected YES, the next two scrolls are displayed.

```
      -  PRINTER SCROLL 10A  -
Contents string #2
 _____________
<   ENTER    >
```

Password:
Operator

Default: " "

```
      -  PRINTER SCROLL 10B  -
String #2 pos.
X = _____   , Y =  _____
ENTER                    X\Y-pos
```

Password:
Operator

	X	Y
Default:	2,	1
Min:	0,	1
Max:	24,	80

There is a third string. If only one scale is defined, it is a third heading string exactly as the previous two. If more scales are defined, it may be used to define a scale identifier. String definition is different for each scale and it is used as scale heading.

```
        -  PRINTER SCROLL 11 -
String #3
 >yes<
CHOICE      ENTER
```

Password:
Operator

Default: NO
Selections: YES, NO

If YES was selected, the next two scrolls are displayed.

SCALE# key allows the operator to select the scale.

```
      -  PRINTER SCROLL 11A -
Contents string #3
 SCALE 1
                              SCALE#
```

Password:
Operator

Default: “ ”

If only 1 scale is defined or if more scales are defined, the ENTER and ARROWS keys compare in the fourth line of the display when the numeric or alphanumeric key is pressed.

```
      -  PRINTER SCROLL 11B  -
String #3 pos.
X =  _____  , Y =  _____
ENTER                     X\Y-pos
```

Password:
Operator

	X	Y
Default:	3,	1
Min:	0,	1
Max:	24,	80

A series of variables can be added in the report. Variables are: MASTER TOTAL, RESET TOTAL, DATE, TIME, WEIGHT, and RATE.

The position must be defined for each variable. If you do not intend to add a variable in the report, you should set its X position to 0.

```
       -  PRINTER SCROLL 12  -
Date position
X= ___            Y= ___
ENTER             X\Y-Pos
```

Password:
Operator

	X	Y
Default:	4	1
Min:	0	1
Max:	24	80

```
- PRINTER SCROLL 13 -
Time position
X= ___        Y= ___
ENTER         X\Y-Pos
```

Password:
Operator

	X	Y
Default:	5	1
Min:	0	1
Max:	24	80

```
- PRINTER SCROLL 14 -
Reset total pos.
X= ___        Y= ___
ENTER         X\Y-Pos
```

Password:
Operator

	X	Y
Default:	6	1
Min:	0	1
Max:	24	80

```
- PRINTER SCROLL 15 -
Master total pos.
X= ___        Y= ___
ENTER         X\Y-Pos
```

Password:
Operator

	X	Y
Default:	7,	1
Min:	0,	1
Max:	24,	80

```
- PRINTER SCROLL 16 -
Weight pos.
X= ___        Y= ___
ENTER         X\Y-Pos
```

Password:
Operator

	X	Y
Default:	0,	1
Min:	0,	1

Max:	24,	80

```
- PRINTER SCROLL 17 -
Rate pos.
X= ___          Y= ___
ENTER           X\Y-Pos
```

Password:
Operator

	X	Y
Default:	0,	1
Min:	0,	1
Max:	24,	80

The PRINT Key

The Print Menu is accessible by press the PRINT key in the Run Menu or, if more scales are defined, in Main Menu 1. It is a single screen menu which allows the operator to select and start a print report.

The following screen is displayed:

```
- PRINTER SCROLL -
COM #1 no data
Start print TOTALS
PRINT     RETURN     COM
```

Password: Not Required

The second line gives the status of the printer:

NO DATA
Indicates the printer is idle, no data are being sent to the printer.

IS RUNNING
The system is sending data to the printer.

The third line indicates what kind of data is printed if the PRINT key is pressed. The Up and Down keys select between:

TOTALS
Print totals (all scales if more scales defined)

TOTALS S1
Print totals scale 1 (only if enabled)

TOTALS S2

Print totals scale 2 (only if enabled)

SETUP
Print the setup data of the instrument (Not available in this version)

TRAILS
If audit trails option is active, print audit trails data.

Print starts after the PRINT key is pressed.

The COM key allows the operator to select the printer in case more than one is installed.

Here are some examples of data that can be printed:

Print TOTALS, default:
If one scale is defined:
TOTALS REPORT
DATE: 12-10-1998
TIME: 8:12a

MASTER TOTAL: 0.00 Tons
RESET TOTAL: 0.00 Tons

If more scales are defined:

TOTALS REPORT
DATE: 12-10-1998
TIME: 8:12a

SCALE 1
MASTER TOTAL: 0.00 Tons
RESET TOTAL: 0.00 Tons

SCALE 2
MASTER TOTAL: 0.00 Tons
RESET TOTAL: 0.00 Tons

Print ALARM:
12-10-1998 8:14a
Clock fail

Print AUDIT TRAILS: (Optional)
When print AUDIT TRAILS command is given, the number of records to print is required. This allows the operator to print a portion of the recorded trails.

TRAIL RECORD NR 1
DATE 12-10-1998 TIME 11:59p
VARIABLE scale cap
NEW 400.00
OLD 500.00

TRAIL RECORD NR 2
DATE 12-10-1998 TIME 11:31p
VARIABLE span
NEW 250000
OLD 300000

TRAIL RECORD NR 3
DATE 12-10-1998 TIME 11:59p
NEW 0.05
OLD 0.1

Main Menu 6

Main Menu 6 is dedicated to Audit Trails and Linearization.

```
              - MAIN MENU 6 -
Press MENU for more
AUDIT
TRAIL        LINEAR
```

Audit Trail

This menu is only displayed if the Audit Trails option is installed.
Audit trail consists of an event logger that includes an event counter (000 to 999), the parameter description, the date and time of the change, and the old and new value of the parameter. Parameters may be configuration parameters or routine calibration.

Events and changes may be viewed on the Feeder Controller's display or printed out by an on-site printer.

The logger records the before and after setting of all configuration parameters that affects the calibration of the scale. It also records when calibration was performed. The event counter increments one count for each event.

Audit trail records the time and displays the new and old data for any change in the parameters and functions listed below, indicating each by an event number:

Parameter's Name	Meaning
w unit	weight units
r unit	rate units
t unit	total units
s div	scale division
Audits	Audit trail option
lc sen	load cell sensitivity
s cap	scale capacity
r cap	rate capacity
lc cap	load cell capacity
lc nr	load cells number
lc rl	load cell 1 resistance
.....	.....
lc r6	load cell 6 resistance
test w	test weights for WTS span calibration
rcal r	Rcal resistance for RCAL span calibration
damp w	damping weight
damp rq	damping rate
line 1	linearization factor 1 (0-10%)
....	.....
lin 10	linearization factor (90-100%)
span	span
zero	zero
rcal c	Rcal calibration constant
rcal f	Rcal factor

Function's Name	Meaning
Autozero	autozero function has been executed
Autospan Rcal	autospan with RCal method has been executed
Autospan WTS	autospan with test weights method has been executed
Cold Start	all instrument data has been lost
M.total cleared	master total register has been cleared

```
            - AUDIT TRAILS 1  -
Audit Trails
> NO <
CHOICE      ENTER
```

Password: Service

Default: NO
Selections: YES, NO

If the AUDIT TRAILS are enabled, meaning YES is selected, the following screen appears for a short time (3 seconds):

```
            - AUDIT TRAILS -
Use scroll keys or
enter trail number
```

After 3 seconds the next screen is shown:

```
TRAIL EVENT No. 0000
hh:mm      mm-dd-yyyy
ss nnnnnn = vvvvvv/O(ld)
ss nnnnnn = vvvvvv/N(ew)
```

hh:mm	Time of change
mm-dd-yyyy	Date of change, the format may vary depending on the Country.
ss	Identifies the scale (only if more scales are defined)
nnnnnn	Parameter's name
vvvvvv	Parameter's values, before change (old) and after change (new).

Time and date are only shown if an optional Communication board is installed.

The operator can scroll between events which are displayed in order of date and time. The operator can also enter a number to display a specific event.

Linearization

Manual linearization can be accomplished by applying a known test weight(s) or loading the bin with preweighed material and calculating the scale error. Pressing the ACQuire soft key displays the scale weight for the applied known weight. The operator can then enter in a correction factor. Up to five correction factors can be installed in any order and will be internally sorted by scale loading.

Linearization must first be enabled in Main Menu 6 before any menu screens will appear.

NOTE. Prior to performing a manual linearization, the scale should be properly zeroed. See Chapter 3.

1. Press the MENU key repeatedly until Main Menu 6 appears.

```
- MAIN MENU 6 -
Press MENU for more

LINEAR
```

Press LINEAR soft key to access the Linearization scroll. The following screen appears.

Press CHOICE for selections, YES to enable, or NO to disable linearization. Once enabled, no linearization is done until the operator manually enters the linearization factors.

```
- LINEARIZATION 1 -
Linearization
NO
CHOICE      ENTER
```

Password:
Service

Default: NO
Selections: YES, NO

NO turns off linearization and sets all factors to 1.00. YES turns on linearization.

2. Set linearization to NO and return to the RUN screen.

3. Apply bin loading at the points to be linearized. Record the indicated weight for each point.

4. Calculate the correction factor for each point using the following formula:

$$\text{Correction Factor} = \frac{Actual\ or\ reference\ weight}{Displayed\ weight}$$

5. Enter linearization factors.

Once the factors have been computed, they must be entered.

Press the MENU key repeatedly until the LINEAR soft key is displayed. Press this soft key and then DOWN ARROW. Set linearize to YES, press ENTER. Press the DOWN ARROW key to LINEARIZ #1.

Type in the first weight recorded in Step 4. Then press ENTER.

```
          - LINEARIZ #1 -
Weight      0.0 lb.
Fact.       1.00000
ENTER        WTS       SCALE #
```

If ENGLISH or MIXED:

Default:	0.0 lbs
Min:	0.0 lbs
Max:	500.0 lbs

If METRIC:

Default:	0.0 kg
Min:	0.0 kg
Max:	226.8 kg

Type in the first factor calculated in Step 4. Then press ENTER.

If you enter 1.000 (default value), the load will not be corrected in that portion of the range. A number lower than 1.000 will reduce the span, while a number larger than 1.000 will increase the span.

Default:	1.000000
Min:	0.000000
Max:	1.500000

Press the DOWN ARROW. Repeat Step 5 for all remaining calculated factors.

Main Menu 7

Main Menu 7 contains setup and configuration screens for two independent control loops and enables the operator to define the characteristics and parameters of the loss in weight system. If a dual or second single A/D board is installed, the Scale #1 or 2 soft key is visible. Pressing the key switches scales.

```
              - MAIN MENU 7 -
Press MENU for more

CNTRL       SYSTEM
```

Control Scroll

The controller output is fully configurable as a PID or PEIC controller. The controller can act as a Master or Slave or in a closed loop. The following section explains how to configure the controller. Steps 1 through 11 configure PID Loop 1 and Step 3 through 23 configure PID Loop 2.

1. Control Action During Shutdown

When the LIW feeder is shut down (running and regulation interlock contacts open) and the controller is in auto mode, the control output may correspond to one of the following programmable selections.

- Locked to the last value before shutdown, or
- Selected to a value from 1 to 100% as entered through the keyboard.

When the feeder is started in auto mode, the controller delays the control action for the amount of time entered in Start Delay (from Control Scroll 19). The controller then begins the control action from the value at which the output was Locked or Selected at shutdown.

A LIW feeder running and a regulation interlock normally open contacts are required.

```
        - CNTRL SCROLL 1 -
Start out
>Sel<
CHOICE     ENTER       SCALE#
```

Password:
Operator

Default: SEL
Selections: LOCK, SEL

When the feeder is not running (feeder running contact open),

the control output can be locked (LOCK) to the last value, or set (SEL) to the value entered in the next screen.

Only if START OUT is set to SEL:

```
        - CNTRL SCROLL 2  -
Set control value
0 %
ENTER      SCALE #
```

Password:
Operator

Default: 0 %
Min: 0 %
Max: 100 %

2. High Control Limit

The control output, when in AUTO, cannot exceed this value.

```
        - CNTRL SCROLL 3  -
High control limit
100 %
ENTER                    SCALE#
```

Password:
Operator

Default: 100 %
Min: 0 %
Max: 100 %

3. Low Control Limit

The control output, when in AUTO, cannot be lower than this value.

```
        -  CNTRL SCROLL 4  -
Low control limit
 0 %
ENTER      SCALE#
```

Password:
Operator

4. Proportional Band

Proportional control action responds to the amount of process

deviation from setpoint. It changes the position of the final control element, in direct proportion to the difference between process variable and setpoint. The proportional band is expressed as that percentage of the total scale range, which corresponds to the full corrective range of the final control element.

If proportional band is set to 100%, then a 0 to 100% process variable change causes the output to change 100% of its range. If proportional band is set to 200%, then a 0 to 100% process variable change causes the output to change 50% of its range.

```
        - CNTRL SCROLL 5  -
Proportional band
200 %
ENTER      SCALE#
```

Password:
Operator

Default: 200 %
Min: 50 %
Max: 500 %

Entering 0% turns off proportional band term.

5. Integral (Reset) Time

Reset action responds to a combination of the amount and duration of the process deviation. Integral time sets the slope of the output correction signal. A 100% change in process variable results in a 100% change in output correction signal at the integral time entered.

Set integral time to 0 to inhibit action or if control mode is PEIC.

```
        - CNTRL SCROLL 6  -
Integral time
 0.1 min
ENTER      SCALE#
```

Password:
Operator

Default: 0.1 min
Min: 0 min
Max: 10 min

Entering 0 time turns off integral term.

6. Derivative (Rate) Time

Rate action responds to the speed and direction of the process deviation. In most feeder applications, Derivative is set to zero.

Set derivative time to 0 to inhibit action or if control mode is PEIC.

```
        - CNTRL SCROLL 7  -
Derivative time
 0.0 min
ENTER      SCALE#
```

Password:
Operator

Default: 0 min
Min: 0 min
Max: 10 min

7. PEIC Time (Process Lag)

Process lag is the time duration following a change in the control element until the effect of that change can be measured at the source of the process variable signal. Lag may be measured in the process by making a small manual change in the final control element and observing the elapse time until the process variable display shows the effect of the change.

PEIC control mode is always disabled when time is set to 0. Setting the time to other than zero enables raise and lower digital outputs to become active. Control output may be analog or time proportional.

```
        - CNTRL SCROLL 8  -
PEIC time
  0 sec
ENTER      SCALE#
```

Password:
Operator

Default: 0 sec
Min: 0 sec
Max: 500 sec

When set to 0, there is not a PEIC action. Control output can be analog or time proportional. If time proportional, see Main Menu 4, I/O Definition scroll, for digital outputs.

8. Set Point Source

Define the set point source. Local setpoint should always be entered by keyboard, remote set point can be received from serial line or analog input. If ANALOG IN or SERIAL IN is selected, the LOC/REM key (or LOC/REM digital input) is used to switch from local to remote set point.

```
        - CNTRL SCROLL 9 -
Set point source
 LOCAL
ENTER      SCALE#
```

Password: Service

Default: LOCAL
Selections: LOCAL, ANALOG IN, SERIAL IN

9. Set Point Units

```
        - CNTRL SCROLL 10 -
Set point units
  ENGINEERING
CHOICE   ENTER        SCALE #
```

Password: Service

Default: ENGINEERING
Selections: ENGINEERING, PERCENT

If set point source is Analog in or Serial in the following screens are displayed.

A set point delay can be entered. This delay shifts the remote set point signal in time.

```
        - CNTRL SCROLL 11 -
Setpoint delay
  0 sec
ENTER      SCALE#
```

Password: Service

Default: 0 sec
Min: 0 sec
Max: 500 sec

For control systems where several feeders operate in ratio control, there may be transport lag time from each feeder to the mixing point. To insure a correct ratio at the mixing point, an analog delay can be entered for remote set point.

```
        - CNTRL SCROLL 12  -
Percent of ingredient
 100 %
ENTER      SCALE#
```

Password:
Operator

Default: 100 %
Min: 0 %
Max: 100 %

10. Process Variable Damping

Process variable damping averages the process variable to avoid undesired jumps of the control output.

```
- CNTRL SCROLL 13  -
Process var damping
  0 sec
ENTER      SCALE#
```

Password:
Operator

Default: 0 sec
Min: 0 sec
Max: 120 sec

11. Enable PID+S

Enable the PID+S function for quick control response when setpoint changes.

```
        - CNTRL SCROLL 14-
PID+S function
> NO <
CHOICE    ENTER        SCALE#
```

Password:
Operator

Default: NO
Selections: NO, YES

If YES is pressed, the PID+S function is enabled and the following screen appears to enter the delay time. Use the key pad to enter time value and confirm with the ENTER key.

```
        - CNTRL SCROLL 14A-
Regulation delay
 10 sec
ENTER                    SCALE#
```

Password:
Operator

Default: 10 sec
Max:: 900 sec
Min: 0 sec

The PIC+S function delays control action for the specified time entered in Regulation delay when the set point changes. During this delay, the LIW feeder screw speed changes to reflect the set point change. When Regulation delay ends, control action resumes. When PID+S is enabled and Regulation delay is set to a value other than 0 sec, the Regulation delay time is added to the Start delay time to delay control action at start-up.

12. Jump Cut-Off Function

The Jump Cut-Off function, when enabled, eliminates system instability that may be caused by temporary disturbances that may cause the rate of flow indication to jump. Example: A vibrator that periodically shakes the hopper. Jump is enabled in the following scroll and is based on two parameters: the delay (CO_DELAY) and the deviation (CO-DEV).

After batch start, the system tries to reach the desired setpoint, and during this time the Jump Cut-Off is inactive. When the error between flow rate and setpoint enters the bandwidth

defined by CO_DEV and stays in this range for a minimum of 1 second, Jump Cut-Off assumes the system is stable. At the same time, it starts to monitor the deviation.

If the deviation moves outside the CO_DEV limit, the Jump Cut-Off forces the rate equal to the setpoint and sets a timer to CO_DELAY value. When the timer reaches zero, the rate is released to the real value, restarting normal control action. The time may be longer if two conditions are detected during the time interval:

> A change in polarity of the error. If an error is detected, the timer is restarted and set to CO-DELAY value.
>
> If after the initial peak starts to decrease, that forced the error outside its limits and the error decreasing, the time is frozen until the error enters the stability band or reverts its trend.

The period of time that the control is frozen is indicated by the letter “C” in the RUN scroll.

Jump Cut-Off is inhibited if:

> The MT2104 feeder controller is in MANUAL.
>
> The system is refilling.
>
> Control action is not running.

The set point changes and the difference between the new and previous value is more than CO_DEV.

```
        -  CNTRL SCROLL 15 -
Jump Cut-off
>NO<
CHOICE    ENTER         SCALE#
```

Password: Service

Default: NO
Selections: YES, NO

If YES is selected, the following two scrolls appear.

Defines CO_DELAY TIME

```
- CNTRL SCROLL 15A -
Delay
 5 sec
ENTER                SCALE#
```

Password: Service

Default: 5 sec
Max: 120 sec
Min: 1 sec

Defines the CO_DEV, stability range and cut-off limits.

```
- CNTRL SCROLL 15B -
Deviation
 5.0 %
ENTER                SCALE#
```

Password: Service

Default: 5.0 %
Min: 0.1 %
Max: 50.0 %

13. Autotuning

Selecting YES in the next scroll enables the autotuning mode. Autotuning allows an increased speed response of the system at the start and when the setpoint changes. When active, the feeder controller automatically determines the regulation parameters. The rate interval and the weight constant is the basis of the regulation error.

```
- CONTROL SCROLL 16 -
Autotuning
   NO
CHOICE    ENTER      SCALE#
```

Password: Service

Default: NO
Selections: NO, YES

14. Controlled variable

Select the variable to be controlled by the MT2104 feeder controller.

```
- CONTROL SCROLL 17 -
Controlled variable
 >Rate<
CHOICE    ENTER       SCALE#
```

Password: Service

Default: RATE
Selections: RATE, LEVEL

15. Control action

Select the control action.

```
- CONTROL SCROLL 18 -
Control action
 >Direct<
CHOICE  ENTER  SCALE#
```

Password: Service

Default: DIRECT
Selections: DIRECT, INVERSE

16. Start Delay Function

Enter the START DELAY time value using the key pad and confirm with ENTER.

```
- CONTROL SCROLL 19 -
Start delay
 5 sec
ENTER                SCALE#
```

Password: Service

Default: 5 sec
Min: 0 sec
Max: 0 sec

The Start delay function delays control action for the specified time at start-up. During this delay, the LIW feeder screw speed changes to the Lock (before shut down) value or the Sel value from - CONTROL SCROLL 1-. When Start delay ends, control action resumes. If PID+S is enabled, the Regulation delay time is added to the Start delay time to delay control at start-up.

System Scroll

The System Scroll defines the characteristics and parameters of the loss in weight system.

1. Setting Maximum Rate and Dead Band

   The first entry is the rate capacity, which is the maximum rate of the scale.

```
        - SYSTEM SCROLL 1 -
Max. rate capacity
 100.0  Lb/h
ENTER      SCALE#
```

Password: Service

Default: 100.0
Min: 1
Max: 15,000.0

2. Enter Minimum Rate

```
        - SYSTEM SCROLL 2 -
Min. rate capacity
 0.0  Lb/h
ENTER      SCALE#
```

Password: Service

Default: 0.0
Min: 0.0
Max: 15,000.0

3. Setting Refill Parameters

   Define the two weight setpoints for starting and stopping the refill. Setpoints can be entered in percent of scale capacity or

in engineering units. Press the UNIT key to switch between % and engineering units.

Enter the start refill set.

```
        - SYSTEM SCROLL 3 -
Start refill set
 20 %
ENTER      UNITS        SCALE#
```

Password: Operator

Default: 20%
Min: 0%
Max: 105%

Enter the end refill set.

```
        - SYSTEM SCROLL 4 -
End refill set
  80 %
ENTER      UNITS        SCALE#
```

Password: Operator

Default: 80%
Min: 0%
Max: 105%

Define if refill can be executed when the system is in manual mode.

```
        - SYSTEM SCROLL 5 -
Refill on manual
> No <
CHOICE    ENTER        SCALE#
```

Password: Operator

Default: NO
Selections: YES, NO

At the end of the refill, the system waits the time specified before restarting normal action (control and rate computation).

```
        -  SYSTEM SCROLL 6  -
End refill time
 10  sec
ENTER                    SCALE#
```

Password: Operator

Default: 10 sec
Min: 0 sec
Max: 600 sec

Refill must be completed in a shorter time than what is entered here. If it takes longer, an alarm is activated.

```
        -  SYSTEM SCROLL 7  -
Refill time-out
 90  sec
ENTER                    SCALE#
```

Password: Operator

Default: 90 sec
Min: 0 sec
Max: 600 sec

4. Density Compensation

A difference of density may occur between the start and end of the refill. This determines a variation in the flow rate for the same control output. The rate will be lower at end of refill than it was at the beginning. This variation, due to the pressure of the material, may be compensated by the system.

```
        -  SYSTEM SCROLL 8  -
Density compensation
mode       > none <
CHOICE     ENTER       SCALE#
```

Password: Operator

Default: NONE
Selections: NONE, CORRECT, SET, AUTO

If CORRECT is selected, enter the correction in percent.

```
        -  SYSTEM SCROLL 9A -
Control out correct
 0 %
ENTER        +/-            SCALE#
```

Password: Operator

Default: 0 %
Min: 0 %
Max: 100 %

If SET selected, enter the control output value in percent.

```
        -  SYSTEM SCROLL 9B -
Control out value
 0 %
ENTER       SCALE#
```

Password: Operator

Default: 0 %
Min: 0 %
Max: 100 %

5. Setting Rate Acquisition Parameters

The two parameters which determine how the system computes the rate are RATE INTERVAL and WEIGHT CONSTANT. They are defined in the next two scrolls.

```
        -  SYSTEM SCROLL 10 -
Rate interval
 1.0 sec
ENTER                       SCALE#
```

Password: Operator

Default: 1.0 sec
Min: 0.1 sec
Max: 10 sec

```
        -  SYSTEM SCROLL 11 -
Weight constant
 4
ENTER                       SCALE#
```

Password: Operator

Default: 4
Min: 1
Max: 16